NordicTrack®
ELITE 1400

Model No. NTL14020-INT.0
Serial No. _____

Write the serial number in the space above for reference.

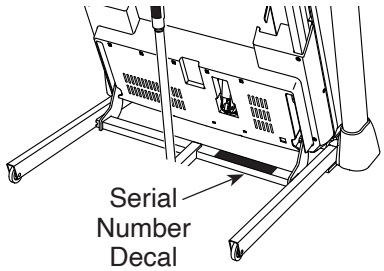

USER'S MANUAL

CUSTOMER SERVICE

UNITED KINGDOM
Call: 0330 123 1045
From Ireland: 053 92 36102
Website: iconsupport.eu
E-mail: csuk@iconeurope.com
Write:
ICON Health & Fitness, Ltd.
Unit 4, Westgate Court
Silkwood Park
OSSETT
WF5 9TT
UNITED KINGDOM

AUSTRALIA
Call: 1800 993 770
E-mail: australiacc@iconfitness.com
Write:
ICON Health & Fitness, Inc.
PO Box 635
WINSTON HILLS NSW 2153
AUSTRALIA

⚠ CAUTION

Read all precautions and instructions in this manual before using this equipment. Keep this manual for future reference.

iconeurope.com

TABLE OF CONTENTS

WARNING DECAL PLACEMENT 2
IMPORTANT PRECAUTIONS 3
BEFORE YOU BEGIN 5
PART IDENTIFICATION CHART 6
ASSEMBLY 7
HOW TO USE THE TREADMILL 17
HOW TO FOLD AND MOVE THE TREADMILL 29
MAINTENANCE AND TROUBLESHOOTING 30
EXERCISE GUIDELINES 33
PART LIST 34
EXPLODED DRAWING 36
ORDERING REPLACEMENT PARTS . . . . . Back Cover
RECYCLING INFORMATION . . . . . Back Cover

WARNING DECAL PLACEMENT

This drawing shows the locations of the warning decals. **If a decal is missing or illegible, call the telephone number on the front cover of this manual and request a free replacement decal. Apply the decal in the location shown.** Note: The decals may not be shown at actual size.

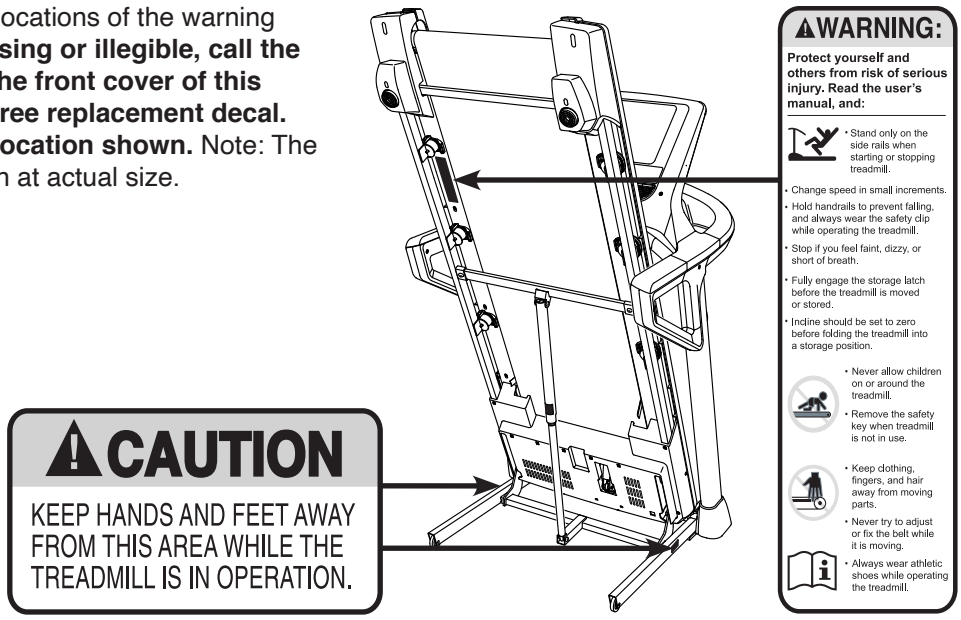

NORDICTRACK and IFIT are registered trademarks of ICON Health & Fitness, Inc. Google Maps is a trademark of Google LLC. The Bluetooth® word mark and logos are registered trademarks of Bluetooth SIG, Inc. and are used under license. Wi-Fi is a registered trademark of Wi-Fi Alliance. WPA and WPA2 are trademarks of Wi-Fi Alliance.

IMPORTANT PRECAUTIONS

⚠WARNING: To reduce the risk of burns, fire, electric shock, or injury to persons, read all important precautions and instructions in this manual and all warnings on your treadmill before using your treadmill. ICON assumes no responsibility for personal injury or property damage sustained by or through the use of this product.

1. It is the responsibility of the owner to ensure that all users of this treadmill are adequately informed of all warnings and precautions.

2. Before beginning any exercise program, consult your physician. This is especially important for persons over age 35 or persons with pre-existing health problems.

3. The treadmill is not intended for use by persons with reduced physical, sensory, or mental capabilities or lack of experience and knowledge, unless they have been given supervision or instruction concerning use of the treadmill by someone responsible for their safety.

4. Use the treadmill only as described in this manual.

5. The treadmill is intended for home use only. Do not use the treadmill in any commercial, rental, or institutional setting.

6. Keep the treadmill indoors, away from moisture and dust. Do not put the treadmill in a garage or covered patio, or near water.

7. Place the treadmill on a level surface, with at least 8 ft. (2.4 m) of clearance behind it and 2 ft. (0.6 m) on each side. Do not place the treadmill on any surface that blocks air openings. To protect the floor or carpet from damage, place a mat under the treadmill.

8. Do not operate the treadmill where aerosol products are used or where oxygen is being administered.

9. Keep children under age 16 and pets away from the treadmill at all times.

10. The treadmill should be used only by persons weighing 350 lbs. (158 kg) or less.

11. Never allow more than one person on the treadmill at a time.

12. Wear appropriate exercise clothes while using the treadmill. Do not wear loose clothes that could become caught in the treadmill. Athletic support clothes are recommended for both men and women. *Always wear athletic shoes. Never use the treadmill with bare feet, wearing only stockings, or in sandals.*

13. When connecting the power cord (see page 17), plug the power cord into an earthed circuit. No other appliance should be on the same circuit. When replacing the fuse in the power cord adapter, insert an ASTA-approved BS1362, 13-amp fuse into the fuse carrier.

14. If an extension cord is needed, use only a 3-conductor, 14-gauge (2 mm^2) cord that is no longer than 5 ft. (1.5 m).

15. Keep the power cord away from heated surfaces.

16. Never move the walking belt while the power is turned off. Do not operate the treadmill if the power cord or plug is damaged, or if the treadmill is not working properly. (See MAINTENANCE AND TROUBLESHOOTING on page 30 if the treadmill is not working properly.)

17. Read, understand, and test the emergency stop procedure before using the treadmill (see HOW TO TURN ON THE POWER on page 19). Always wear the clip while using the treadmill.

18. Always stand on the foot rails when starting or stopping the walking belt. Always hold the handrails while using the treadmill.

19. When a person is walking on the treadmill, the noise level of the treadmill will increase.

20. Keep fingers, hair, and clothing away from the moving walking belt.

21. The treadmill is capable of high speeds. Adjust the speed in small increments to avoid sudden jumps in speed.

22. The heart rate monitor is not a medical device. Various factors, including the user's movement, may affect the accuracy of heart rate readings. The heart rate monitor is intended only as an exercise aid in determining heart rate trends in general.

23. Never leave the treadmill unattended while it is running. Always remove the key, press the power switch into the off position (see the drawing on page 5 for the location of the power switch), and unplug the power cord when the treadmill is not in use.

24. Do not attempt to move the treadmill until it is properly assembled. (See ASSEMBLY on page 7 and HOW TO FOLD AND MOVE THE TREADMILL on page 29.) You must be able to safely lift 45 lbs. (20 kg) to move the treadmill.

25. When folding or moving the treadmill, make sure that the storage latch is holding the frame securely in the storage position. Do not operate the treadmill while it is folded.

26. Do not change the incline of the treadmill by placing objects under the treadmill.

27. Never insert any object into any opening on the treadmill.

28. Inspect and properly tighten all parts each time the treadmill is used. Use only manufacturer-supplied parts.

29. **DANGER:** Always unplug the power cord immediately after use, before cleaning the treadmill, and before performing the maintenance and adjustment procedures described in this manual. Never remove the motor hood unless instructed to do so by an authorized service representative. Servicing other than the procedures in this manual should be performed by an authorized service representative only.

30. Over exercising may result in serious injury or death. If you feel faint, if you become short of breath, or if you experience pain while exercising, stop immediately and cool down.

SAVE THESE INSTRUCTIONS

BEFORE YOU BEGIN

Thank you for selecting the new NORDICTRACK® ELITE 1400 treadmill. The ELITE 1400 treadmill provides an impressive selection of features designed to make your workouts at home more effective and enjoyable.

For your benefit, read this manual carefully before you use the treadmill. If you have questions after reading this manual, please see the front cover of this manual. To help us assist you, note the product model number and serial number before contacting us. The model number and the location of the serial number decal are shown on the front cover of this manual.

Before reading further, please familiarize yourself with the parts that are labeled in the drawing below.

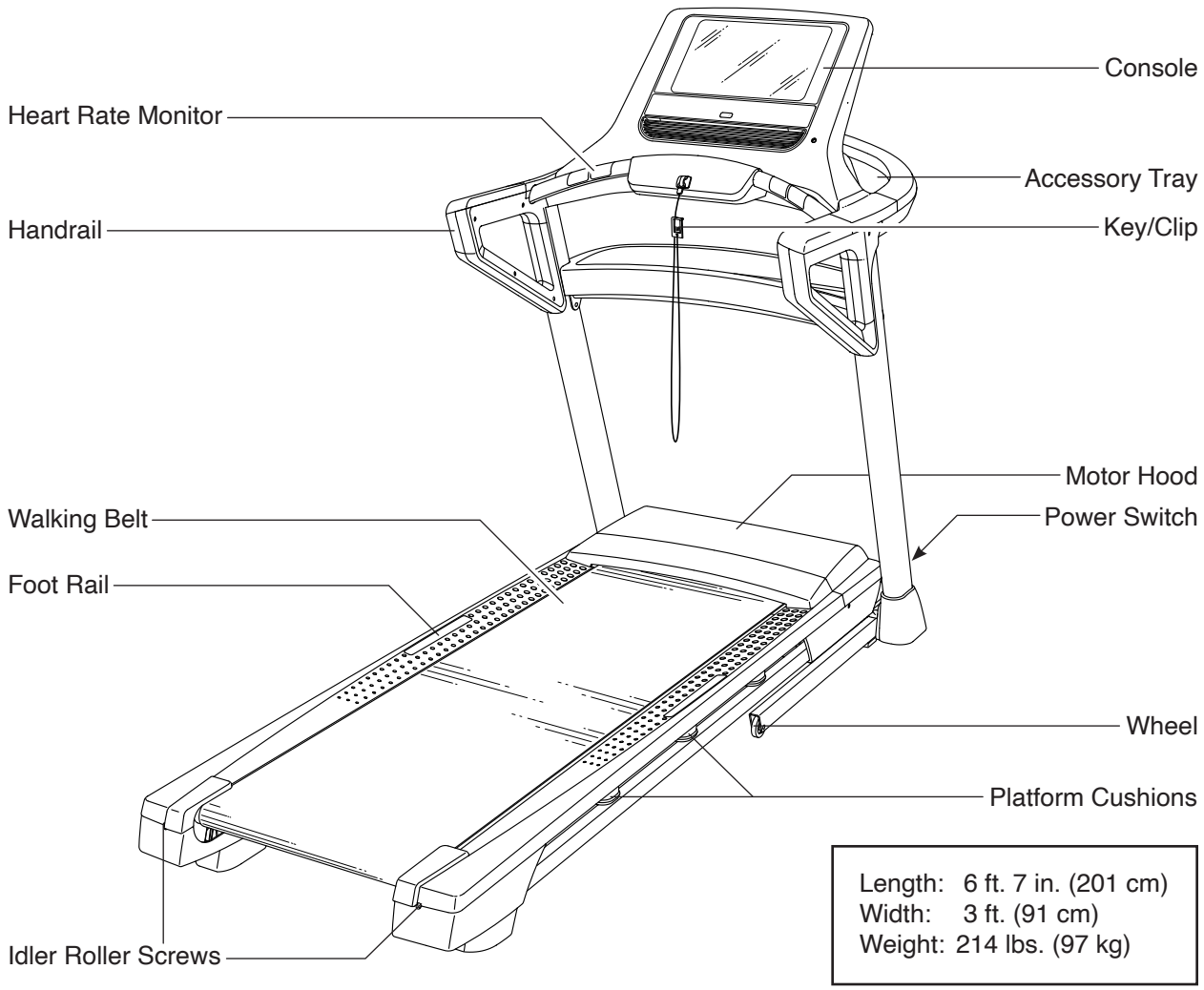

Length: 6 ft. 7 in. (201 cm)
Width: 3 ft. (91 cm)
Weight: 214 lbs. (97 kg)

PART IDENTIFICATION CHART

Use the drawings below to identify small parts used for assembly. The number in parentheses below each drawing is the key number of the part, from the PART LIST near the end of this manual. The number following the key number is the quantity used for assembly. **Note: If a part is not in the hardware kit, check to see whether it is preattached. Extra parts may be included.**

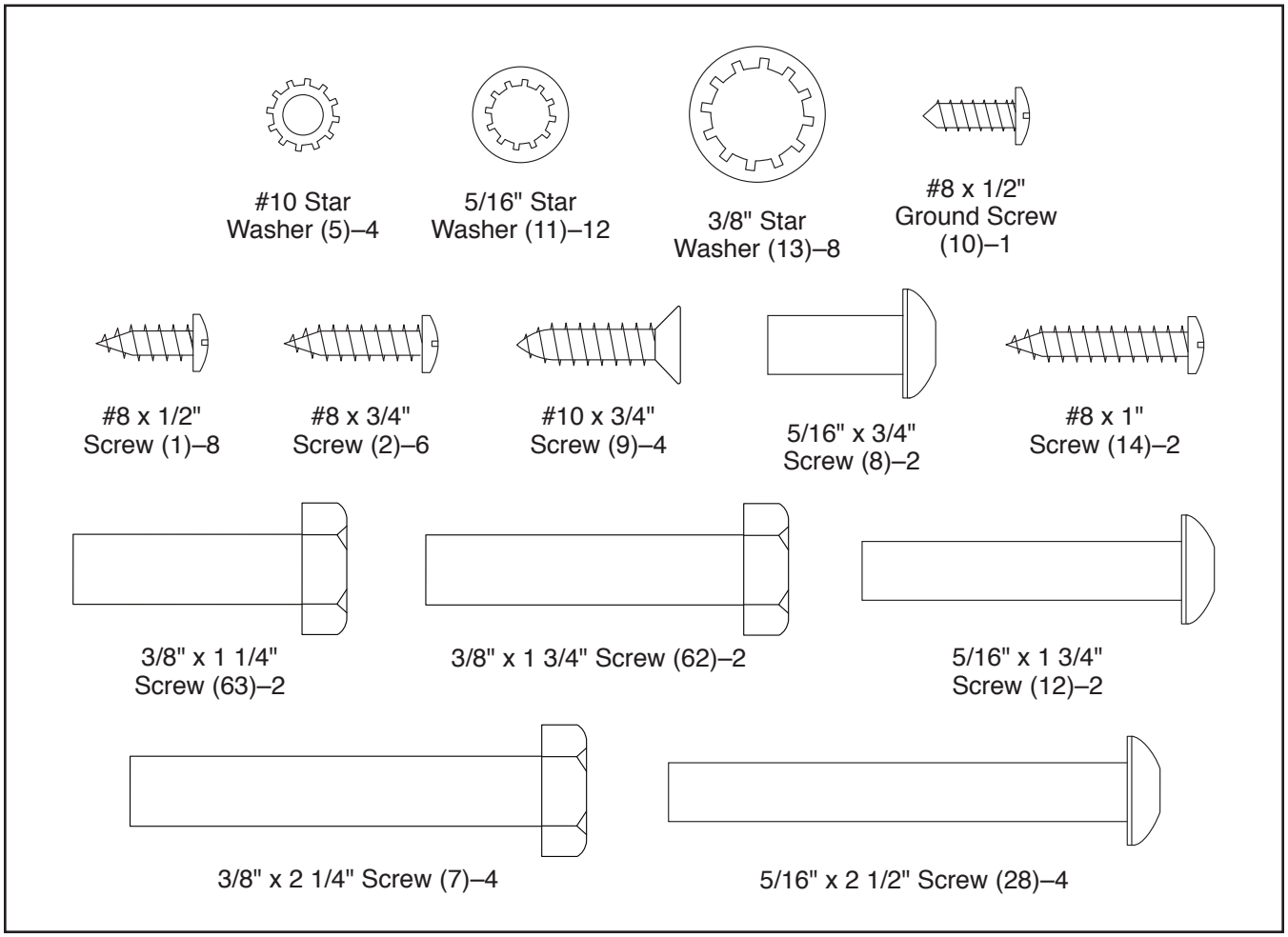

ASSEMBLY

- Assembly requires two persons.
- Place all parts in a cleared area and remove the packing materials. Do not dispose of the packing materials until you finish all assembly steps.
- After shipping, there may be an oily substance on the exterior of the treadmill. This is normal. If there is an oily substance on the treadmill, wipe it off with a soft cloth and a mild, non-abrasive cleaner.
- To identify small parts, see page 6.
- Left parts are marked “L” or “Left” and right parts are marked “R” or “Right.”
- Assembly requires the following tools:

the included hex keys

one Phillips screwdriver

one adjustable wrench

To avoid damaging parts, do not use power tools.

1. **To register your product and activate your warranty in the UK,** go to iconsupport.eu. If you do not have internet access, call Customer Service (see the front cover of this manual).

   To register your product and activate your warranty in Australia, email or post the following information to the email address or postal address on the front cover of this manual.
   - your receipt (make sure to keep a copy)
   - your name, address, and telephone number
   - the model number, serial number, and name of your product (see the front cover of this manual)

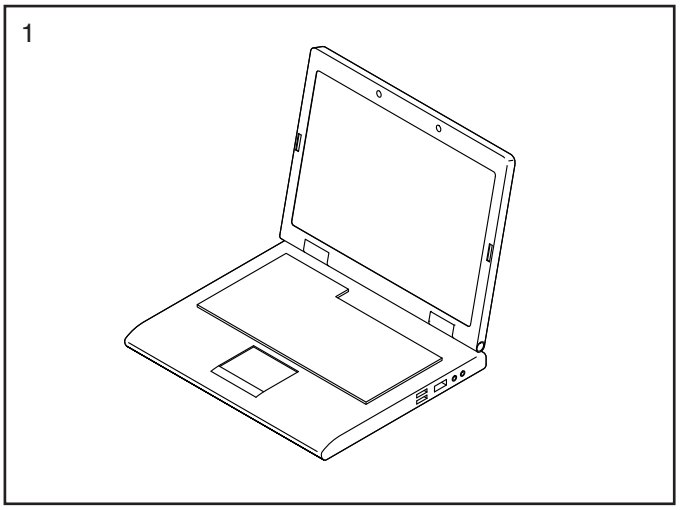

2. **Make sure that the power cord is unplugged.**

   Remove the tie securing the Upright Wire (81) to the front of the Base (94).

   Next, identify the Right Upright (90). Have a second person hold the Right Upright near the Base (94).

   See the inset drawing. Tie the wire tie (A) in the Right Upright (90) securely around the end of the Upright Wire (81). Then, insert the Upright Wire into the lower end of the Right Upright as you pull the other end of the wire tie through the Right Upright.

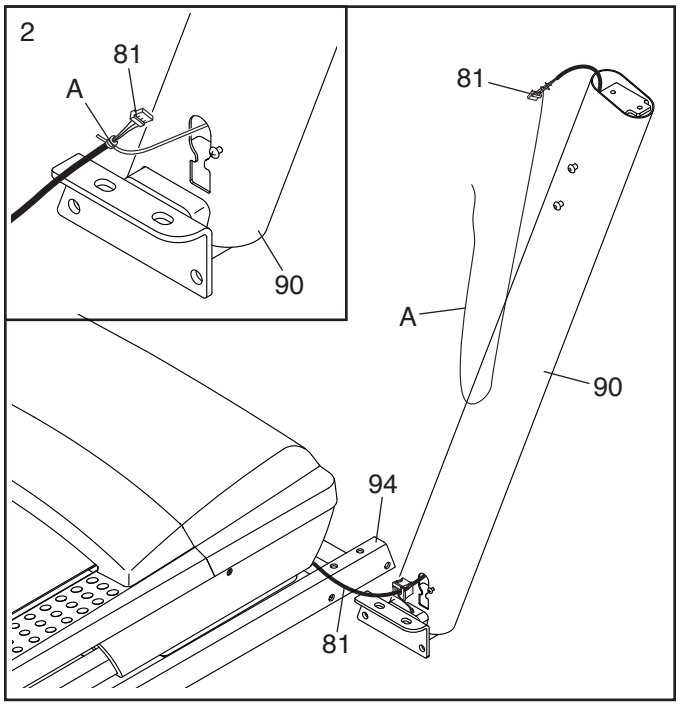

3. Lay the Right Upright (90) near the Base (94). Press the Grommet (77) into the square hole (B) in the Right Upright. **Make sure not to pinch the ground wire (C).**

   If there is a screw (D) preattached to the Right Upright (90), remove and discard it.

   Then, attach the ground wire (C) to the Right Upright (90) with a #8 x 1/2" Ground Screw (10).

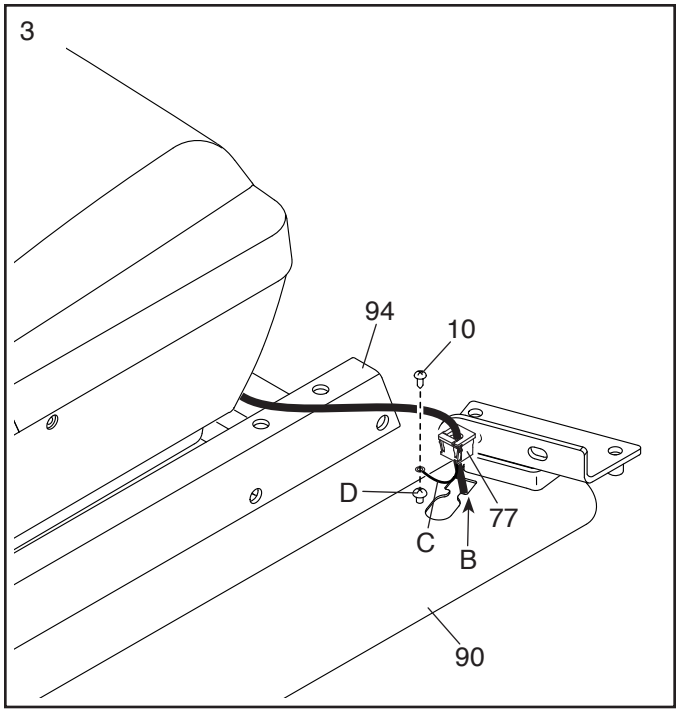

4. Hold the Right Upright (90) against the Base (94). **Make sure not to pinch the Upright Wire (81).**

   Attach the Right Upright (90) and a Wheel (101) with two 3/8" x 2 1/4" Screws (7), a 3/8" x 1 1/4" Screw (63), a 3/8" x 1 3/4" Screw (62), and four 3/8" Star Washers (13) as shown; **do not fully tighten the Screws yet.**

   Attach the Left Upright (not shown) and the other Wheel (not shown) in the same way. Note: There are no wires on the left side.

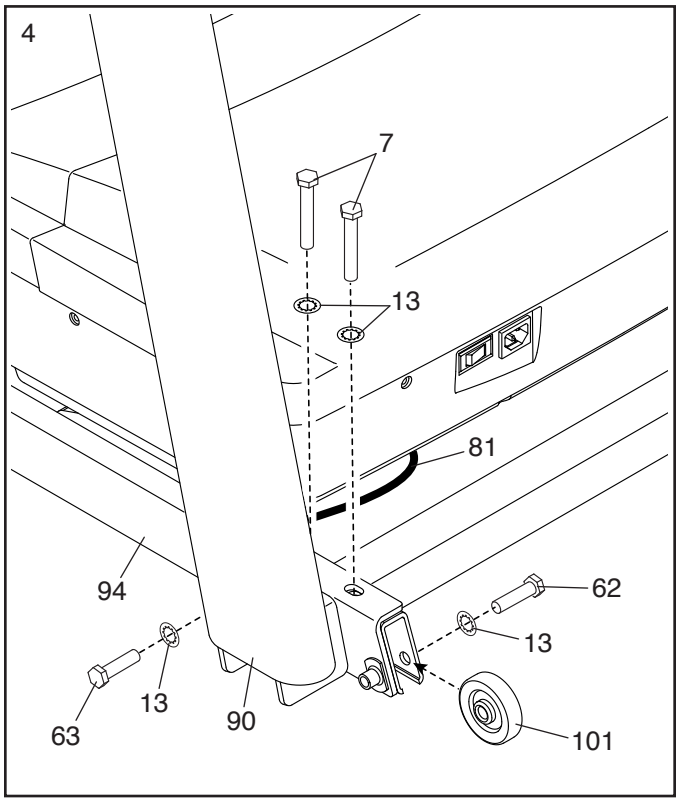

5. **Remove and save the four 5/16" x 3/4" Patch Screws (4)**.

   Identify the Left and Right Base Covers (82, 83). Slide the Left Base Cover onto the Left Upright (89), and slide the Right Base Cover onto the Right Upright (90). **Do not press the Base Covers into place yet.**

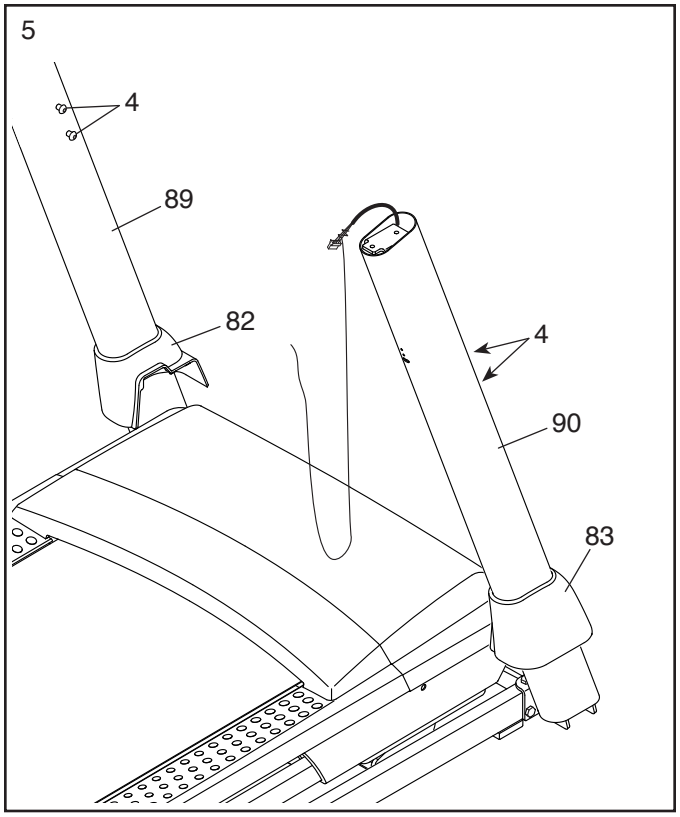

6. **See the left drawing.** Insert the tab (E) on one of the Cover Brackets (18) into the slot (F) in the Left Upright (89), and attach the Cover Bracket with two #8 x 1/2" Screws (1).

   See the right drawing. Attach the other Cover Bracket (18) to the Right Upright (90) as described above. **Note: On the Right Upright, the slot (F) is below the two small holes. The Cover Bracket will need to be rotated 180° compared to the Cover Bracket on the left side.**

   Position the Upright Wire (81) to the left side of the Right Upright (90) as shown.

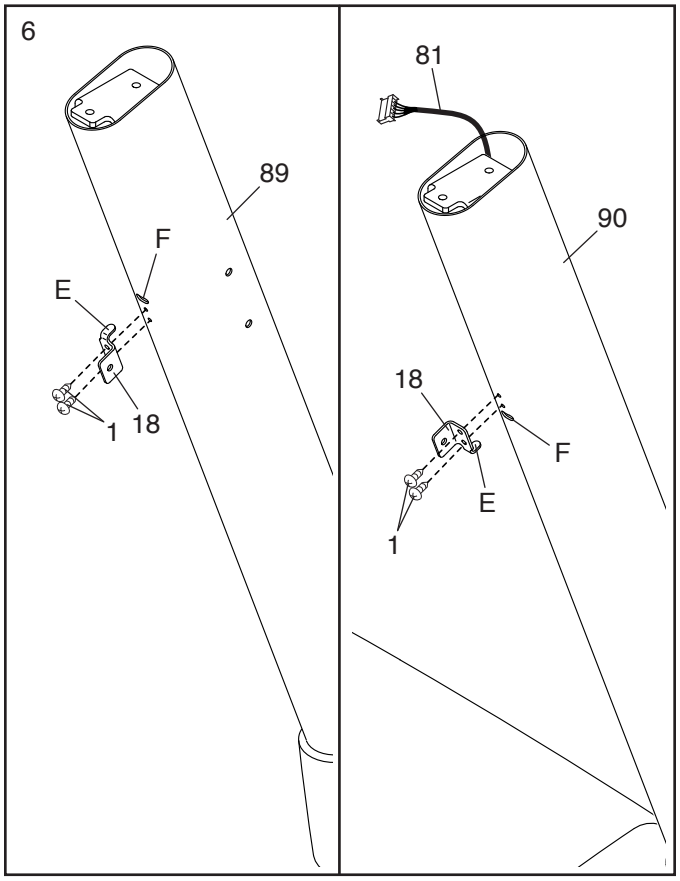

7. **With the help of a second person,** set the console base assembly (G) on the Right Upright (90) and the Left Upright (not shown). **See the inset drawing.** Position the Upright Wire (81) so that it is on the inside of the Upright as shown. **Do not pinch the Upright Wire.**

   Partially tighten a 5/16" x 3/4" Screw (8) into the **center hole (H) on each side** of the console base assembly (G) and into the top of the Right Upright (90) and the Left Upright (not shown); **do not fully tighten the Screws. Note: The Screws are used only to hold the console base assembly in place during assembly.**

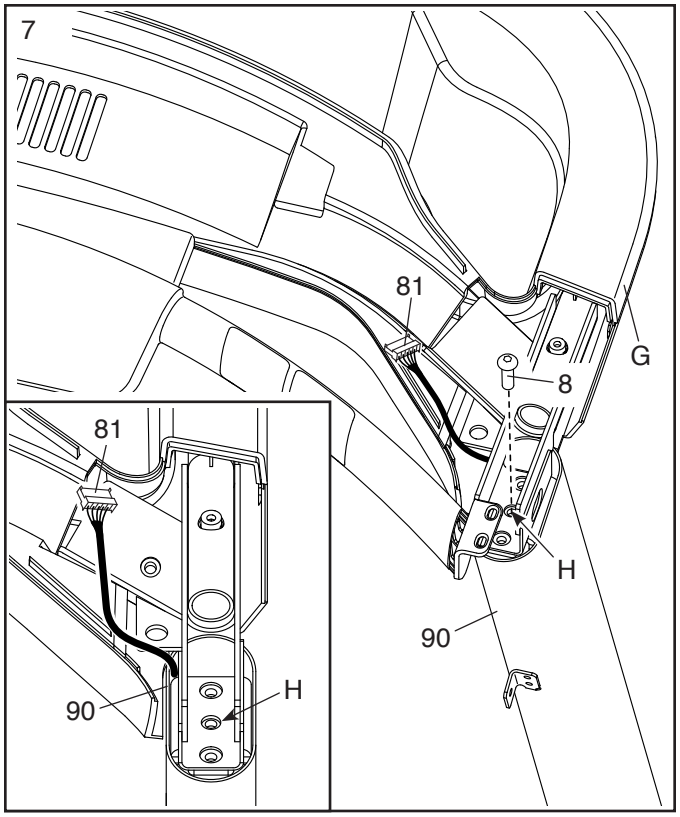

8. Identify the right handrail assembly (I). Remove and discard the two indicated screws (J).

   Next, carefully raise the Pulse Crossbar (93) enough to allow you to slide the Right Handrail (86) onto the console base assembly (G). **See the inset drawing. The Cover Bracket (18) should slide into the indicated space (K) in the handrail assembly.**

   Attach the right handrail assembly (I) with two 5/16" x 2 1/2" Screws (28) and two 5/16" Star Washers (11); **do not fully tighten the Screws yet. Tip: You may need to adjust the position of the right handrail assembly to align the Screws properly.**

   Attach the left handrail assembly (not shown) to the left side as described above.

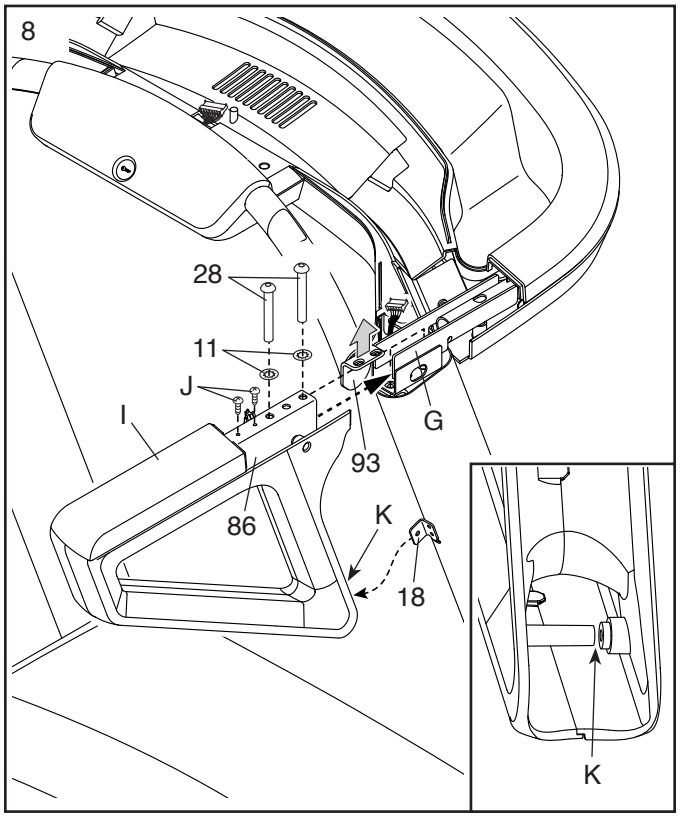

9. **IMPORTANT: To avoid damaging the Pulse Crossbar (93), do not use power tools and do not overtighten the #10 x 3/4" Screws (9).**

   Attach the Pulse Crossbar (93) to the right handrail assembly (I) and the left handrail assembly (not shown) with four #10 x 3/4" Screws (9) and four #10 Star Washers (5) (only one side is shown); **start all of the Screws, and then tighten them.**

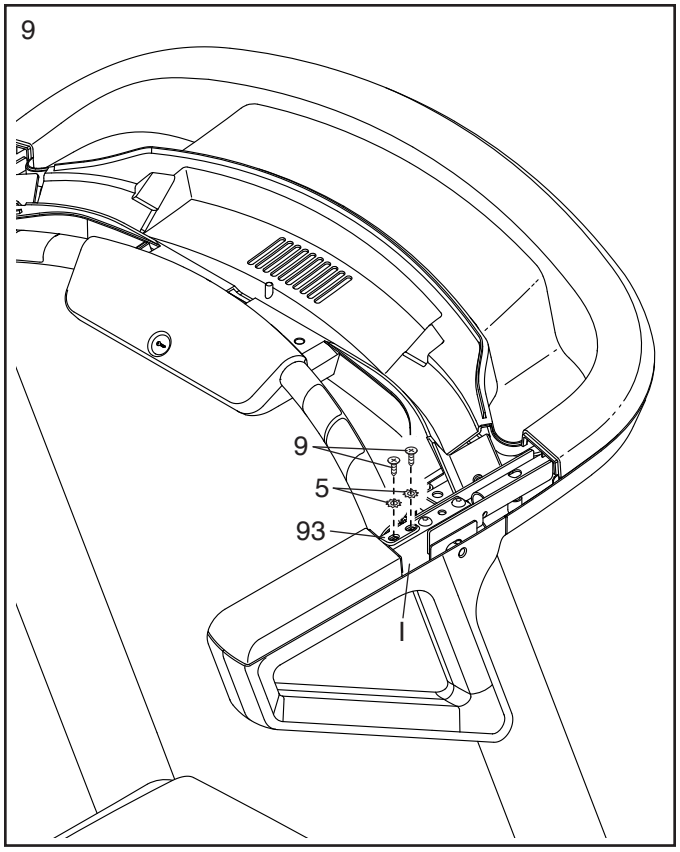

10. With the help of a second person, hold the console assembly (L) near the console base assembly (G).

    See the inset drawing. Connect the wire (M) from the console base assembly (G) to the wire (N) from the console assembly (L). **The connectors should slide together easily and snap into place with an audible click. If they do not, turn one connector and try again.**

    Next, locate the console wire (O) in the console assembly (L). Connect the console wire to the Upright Wire (81). **The connectors should slide together easily and snap into place with an audible click. If they do not, turn one connector and try again.** Then, remove the wire tie (A).

    Then, insert the wires (M, N) into the hole in the Console Base (64). Insert the wires (O, 81) into the console assembly (L), and position the wires on the decal.

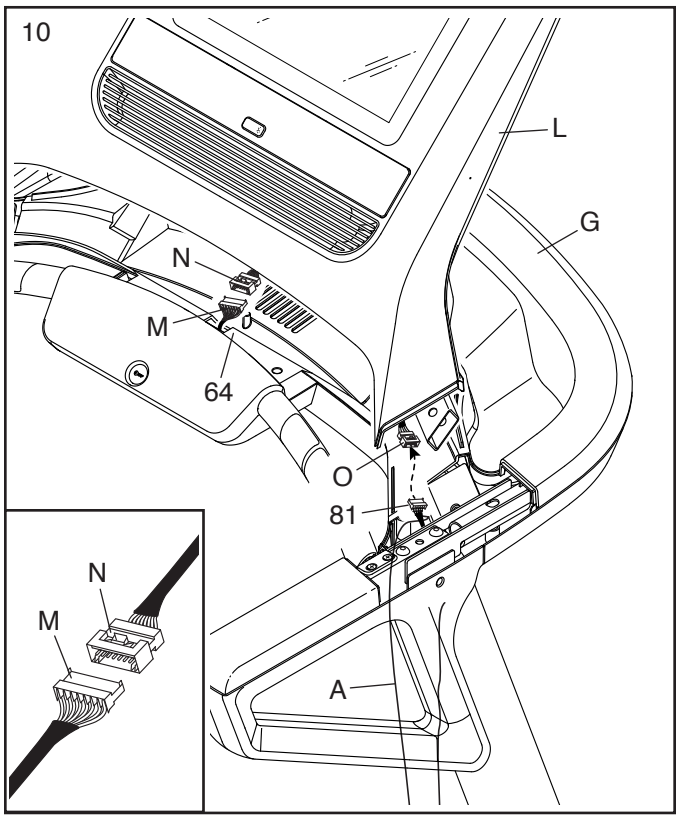

11. Set the console assembly (L) on the brackets on the console base assembly (G). **Do not pinch any wires.** Make sure that the wires (O, 81) are inserted into the console assembly.

    Attach the console assembly (L) with two 5/16" x 1 3/4" Screws (12) and two 5/16" Star Washers (11); **start both Screws, and then tighten them.** Note: Only one side is shown.

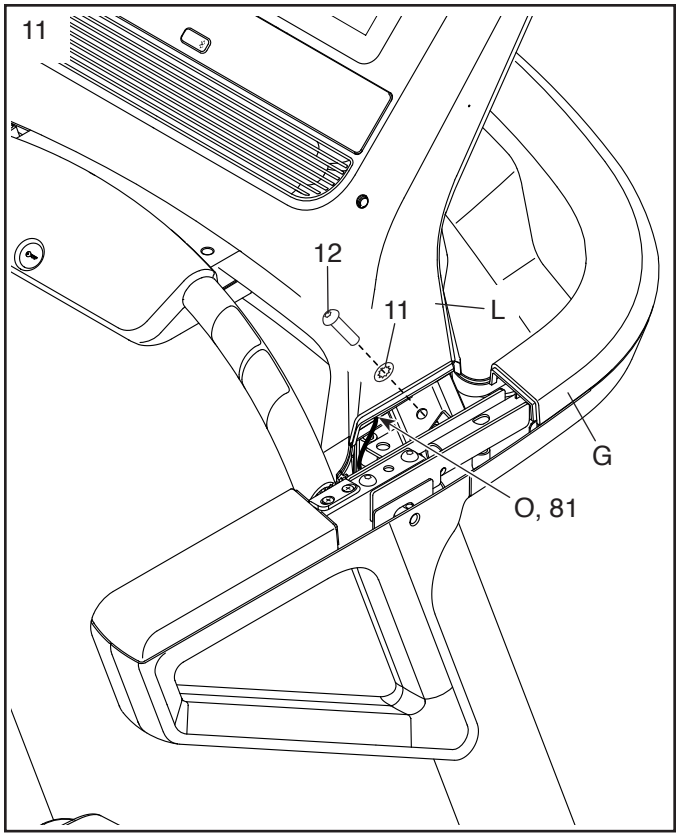

12. Attach the Small Console Cover (27) with two #8 x 3/4" Screws (2); **do not overtighten the Screws. Note: Use the outer two holes in the underside of the console base assembly (G).**

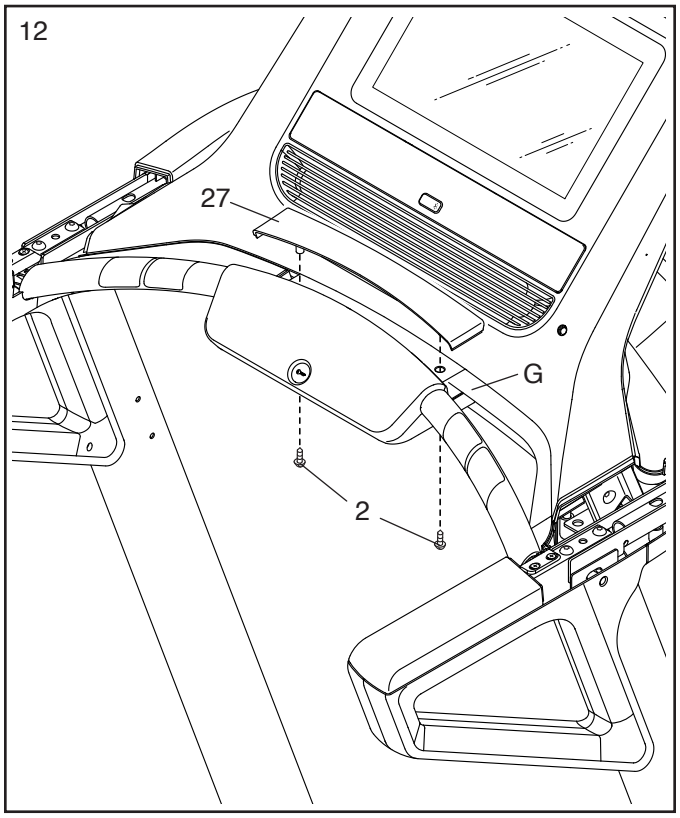

13. Tighten the two 5/16" x 3/4" Screws (8).

Then, tighten four #8 x 3/4" Screws (2) into the right and left handrail assemblies (I, P) in the locations shown; **do not overtighten the Screws.**

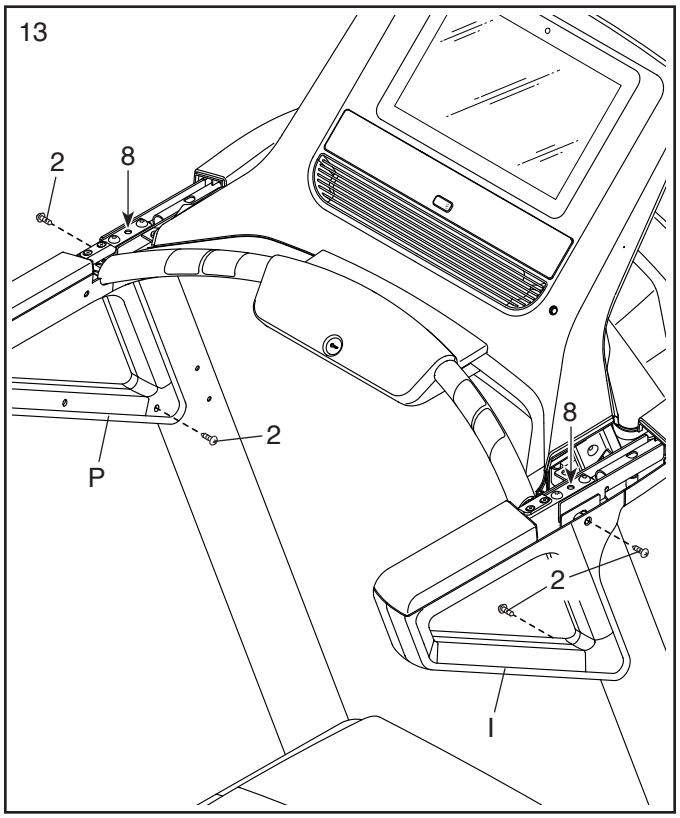

14. Firmly tighten the two 5/16" x 2 1/2" Screws (28) on each side of the handrail assembly (only one side is shown).

Next, identify the Right Handrail Cover (26). Insert the tab (Q) on the Right Handrail Cover into the right handrail assembly (I) in the location shown. Then, press the Right Handrail Cover onto the console assembly (L). The Right Handrail Cover should snap into the indicated hole (R).

Then, attach the Right Handrail Cover (26) with a #8 x 1" Screw (14); **do not overtighten the Screw.**

Attach the Left Handrail Cover (not shown) as described above.

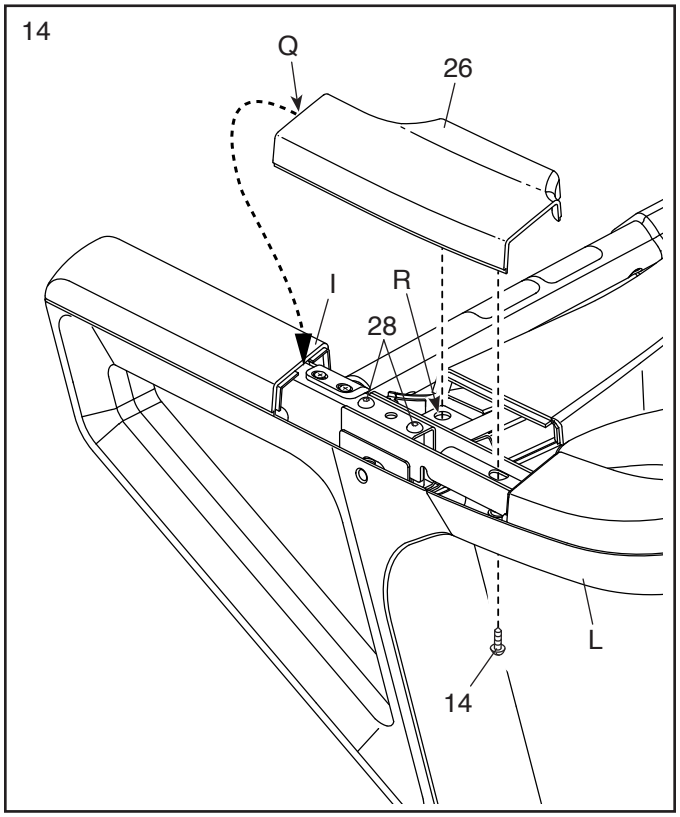

15. **Orient the Upright Crossbar (105) as shown.**

Carefully slide the Upright Crossbar (105) between the Left and Right Uprights (89, 90).

Attach the Upright Crossbar (105) with the four 5/16" x 3/4" Patch Screws (4) that you removed in step 5 and four 5/16" Star Washers (11); **start all four Patch Screws, and then tighten them.**

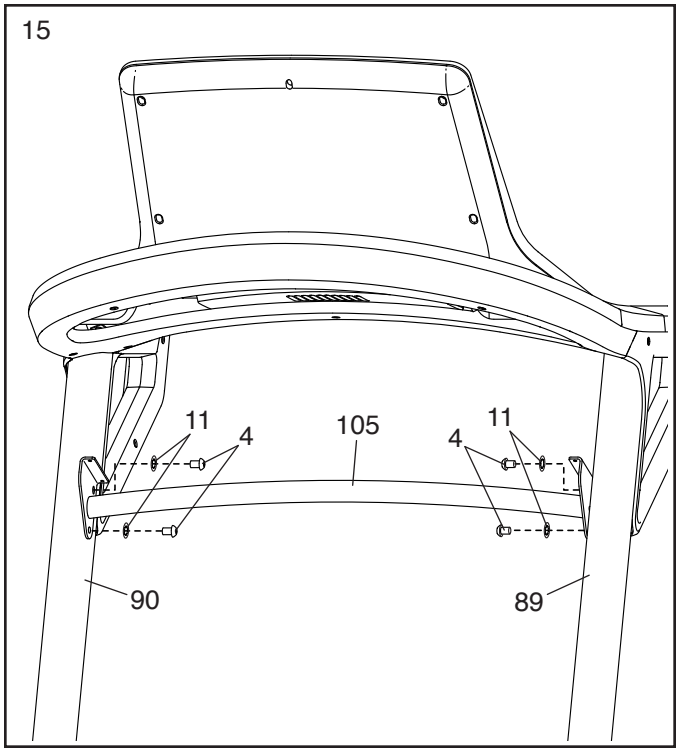

16. Insert the Tray (31) from the front of the treadmill and set it on the Upright Crossbar (105) as shown.

Attach the Tray (31) to the Upright Crossbar (105) with four #8 x 1/2" Screws (1); **start all four Screws, and then tighten them.**

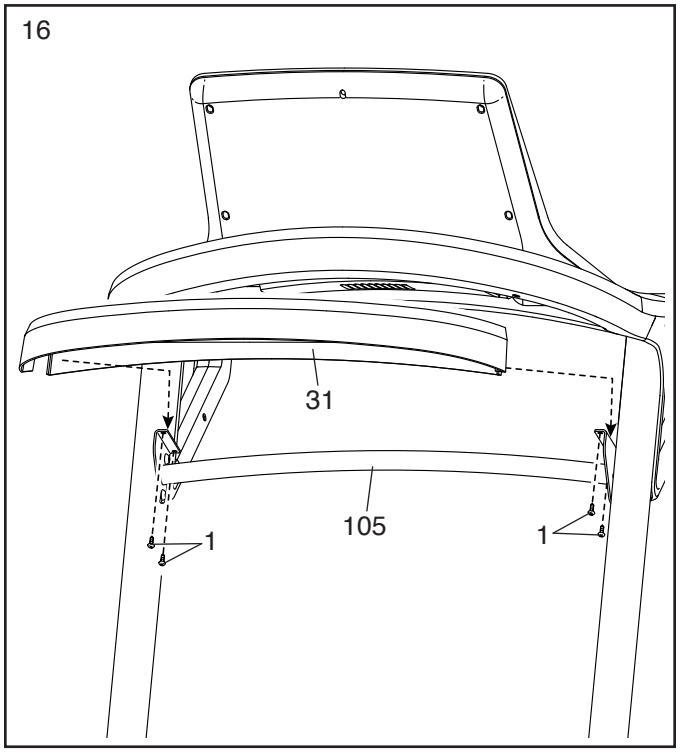

17. **Note: If the treadmill is assembled on a smooth surface, it may roll forward during this step.**

Remove the two 5/16" x 3/4" Patch Screws (4) from the Latch Crossbar (41).

Raise the Frame (56) to the upright position. **Have a second person hold the Frame until step 19 is completed.**

Orient the Latch Crossbar (41) as shown. **Make sure that the "This side toward belt" sticker (S) is facing the treadmill.** Attach the Latch Crossbar to the brackets (T) on the Frame (56) with the two 5/16" x 3/4" Patch Screws (4) that you just removed and two 5/16" Star Washers (11).

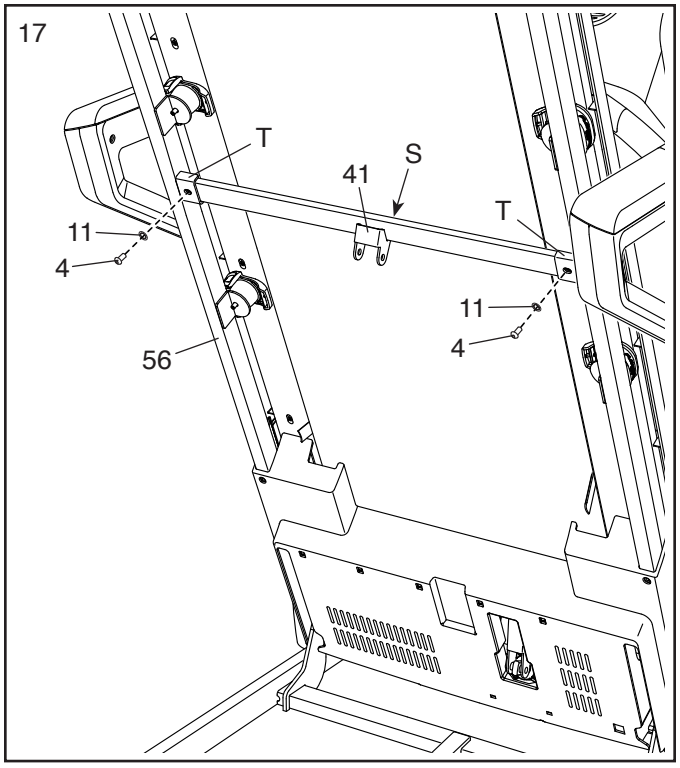

18. Remove the 5/16" Nut (34) and the 5/16" x 1 3/4" Bolt (6) from the bracket on the Base (94).

Next, orient the Storage Latch (53) as shown.

Attach the lower end of the Storage Latch (53) to the bracket on the Base (94) with the 5/16" x 1 3/4" Bolt (6) and the 5/16" Nut (34) as shown.

Then, raise the Storage Latch (53) to a vertical position, and remove the tie (U).

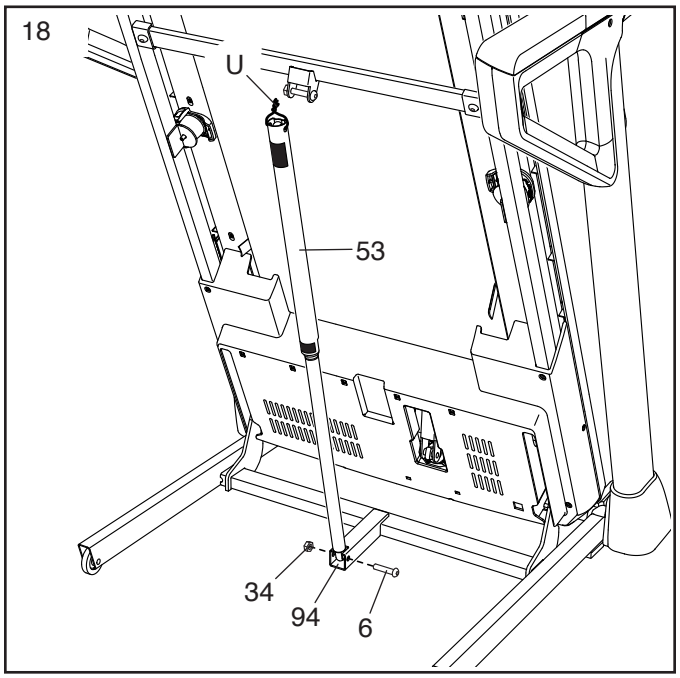

19. Remove the 5/16" Nut (34) and the 5/16" x 2 1/4" Bolt (3) from the bracket on the Latch Crossbar (41).

Align the upper end of the Storage Latch (53) with the bracket on the Latch Crossbar (41), and insert the 5/16" x 2 1/4" Bolt (3) through the bracket and the Storage Latch. **This will push a spacer (V) out of the Storage Latch; discard the spacer.**

Next, tighten the 5/16" Nut (34) onto the 5/16" x 2 1/4" Bolt (3). **Do not overtighten the Nut; the Storage Latch (53) must be able to pivot.**

Then, lower the Frame (56) (see HOW TO LOWER THE TREADMILL FOR USE on page 29).

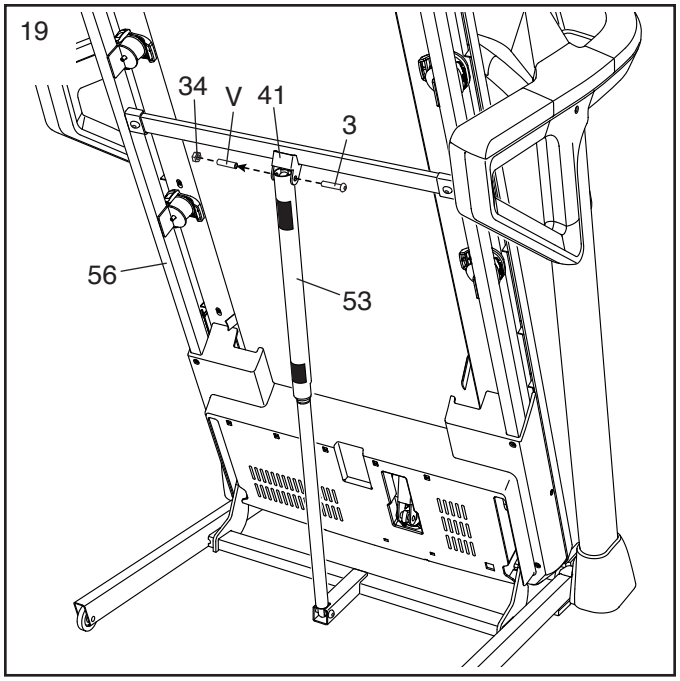

20. **Firmly tighten the four 3/8" x 2 1/4" Screws (7) and the two 3/8" x 1 1/4" Screws (63).**

Next, tighten the two 3/8" x 1 3/4" Screws (62); the Wheels (101) must turn freely.

Next, set the Left Inner Base Cover (99) onto the lower end of the Left Upright (89). Slide the Left Base Cover (82) downward and press it onto the Left Inner Base Cover.

Then, set the Right Inner Base Cover (100) onto the lower end of the Right Upright (90). Slide the Right Base Cover (83) downward and press it onto the Right Inner Base Cover.

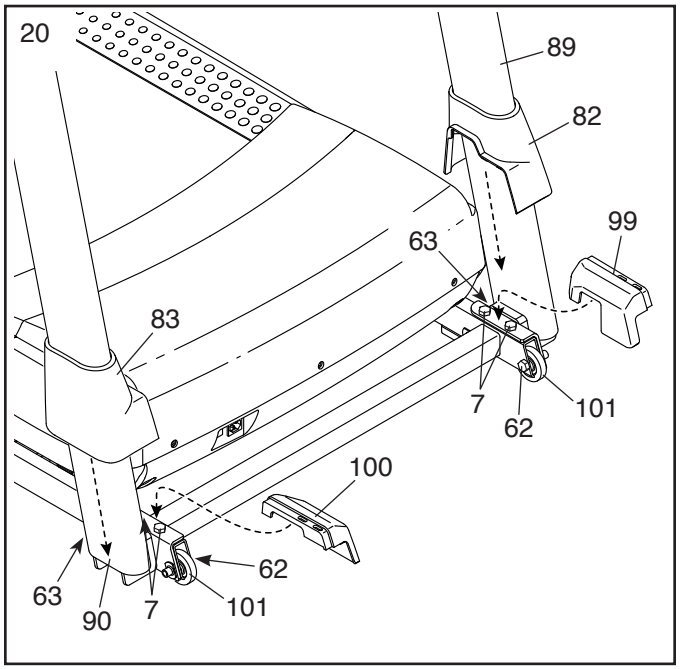

21. **Make sure that all parts are properly tightened before you use the treadmill.** If there are sheets of plastic on the treadmill decals, remove the plastic. To protect the floor or carpet, place a mat under the treadmill. To avoid damage to the console, keep the treadmill out of direct sunlight. Keep the included hex key in a secure place; the hex key is used to adjust the walking belt (see page 32). Note: Extra hardware may be included.

HOW TO USE THE TREADMILL

HOW TO PLUG IN THE POWER CORD

This product must be earthed. If it should malfunction or break down, earthing provides a path of least resistance for electric current to reduce the risk of electric shock. This product's power cord has an equipment-earthing conductor and an earthing plug. **IMPORTANT: If the power cord is damaged, it must be replaced with a manufacturer-recommended power cord.**

⚠ DANGER: Improper connection of the equipment-earthing conductor can result in an increased risk of electric shock. Check with a qualified electrician or serviceman if you are in doubt as to whether the product is properly earthed. Do not modify the plug provided with the product—if it will not fit the outlet, have a proper outlet installed by a qualified electrician.

Follow the steps below to plug in the power cord.

1. Plug the indicated end of the power cord (A) into the socket on the treadmill (B).

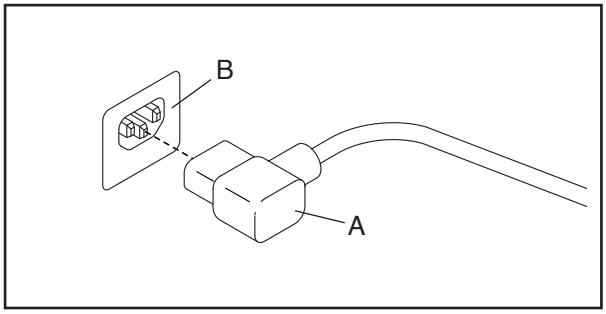

2. Plug the power cord (A) into an appropriate outlet (C) that is properly installed and earthed in accordance with all local codes and ordinances.

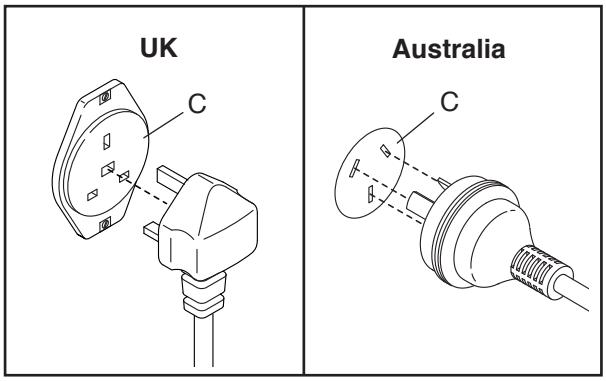

CONSOLE DIAGRAM

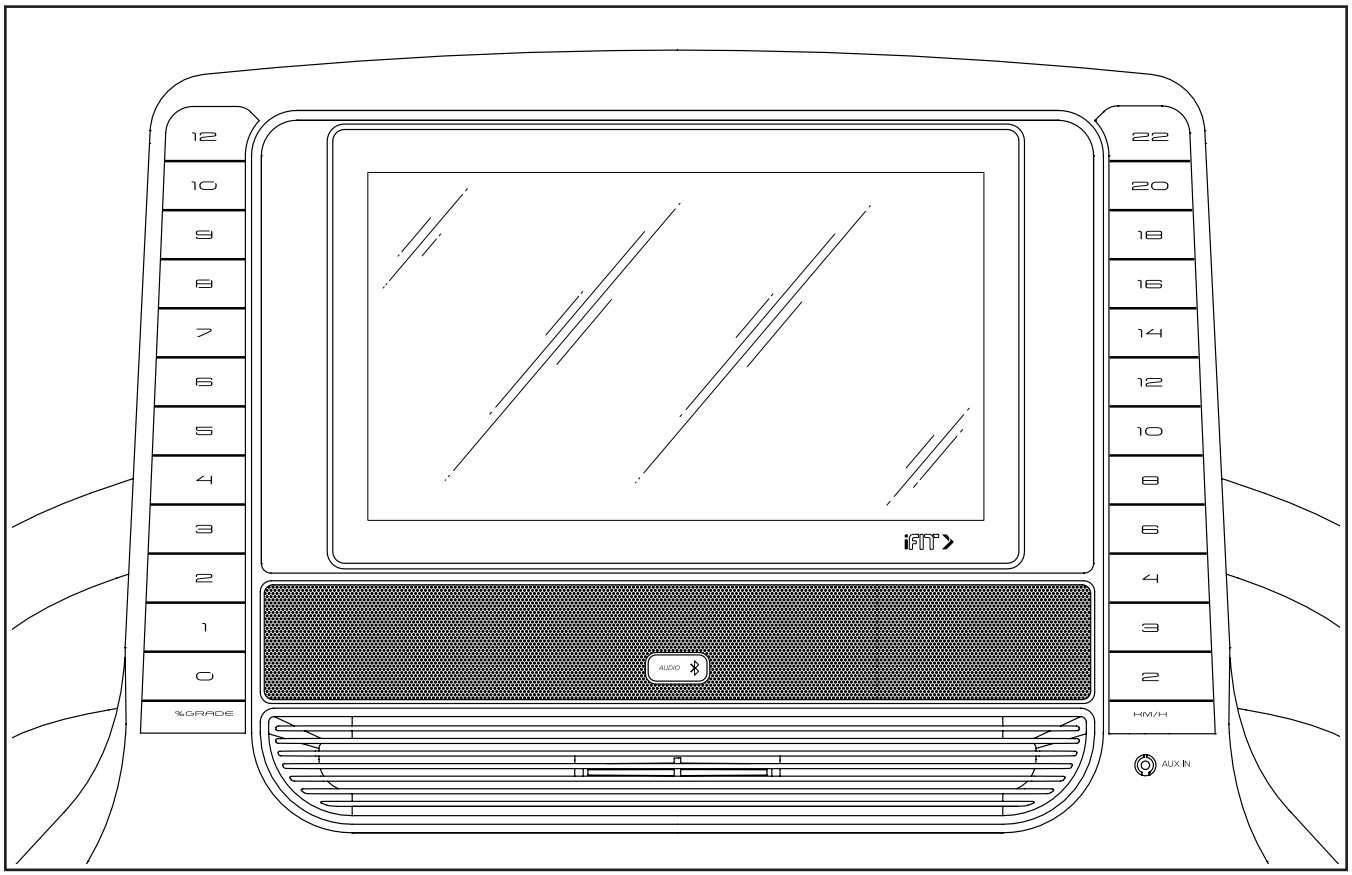

FEATURES OF THE CONSOLE

The advanced treadmill console offers a selection of features designed to make your workouts more effective and enjoyable.

The console features wireless technology that enables the console to connect to iFit. With iFit, you can access a large and varied workout library, create your own workouts, track your workout results, and access many other features.

When you use the manual mode, you can change the speed and incline of the treadmill with the touch of a button. As you exercise, the console will display instant exercise feedback. You can even measure your heart rate using the handgrip heart rate monitor. **See page 28 for information about purchasing an optional wearable heart rate monitor.**

In addition, the console features a selection of workouts. Each workout automatically controls the speed and incline of the treadmill as it guides you through an effective exercise session.

You can even listen to your favorite workout music or audio books with the console's sound system while you exercise.

To turn on the power, see page 19. **To learn how to use the touch screen,** see page 19. **To set up the console,** see page 20.

HOW TO TURN ON THE POWER

IMPORTANT: If the treadmill has been exposed to cold temperatures, allow it to warm to room temperature before you turn on the power. If you do not do this, you may damage the console displays or other electrical components.

Plug in the power cord (see page 17). Next, locate the power switch on the treadmill frame near the power cord. Press the power switch into the reset position (D).

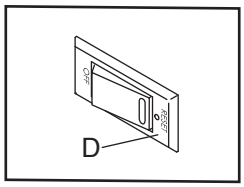

Next, stand on the foot rails of the treadmill. Locate the clip (E) attached to the key (F), and slide the clip securely onto the waistband of your clothes. Then, insert the key into the console. **Note: It may take some time for the console to be ready for use. IMPORTANT: In an emergency, the key can be pulled from the console, causing the walking belt to slow to a stop. Test the clip by carefully taking a few steps backward; if the key is not pulled from the console, adjust the position of the clip.**

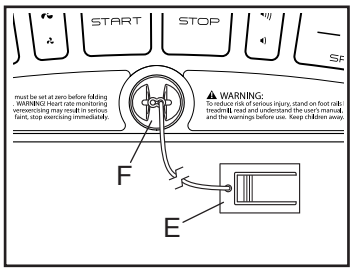

Note: The console can display speed and distance in either miles or kilometers. To find which unit of measurement is selected, see HOW TO CHANGE CONSOLE SETTINGS on page 25.

HOW TO USE THE TOUCH SCREEN

The console features a tablet with a full-color touch screen. The following information will help you become familiar with the tablet's advanced technology:

- The console functions similarly to other tablets. You can slide or flick your finger against the screen to move certain images on the screen, such as the displays in a workout (see step 5 on page 21).
- The screen is not pressure sensitive. You do not need to press hard on the screen.
- To type information into a text box, touch the text box to view the keyboard. To use numbers or other characters on the keyboard, touch the ?123 button. To view more characters, touch the ~[< button. Touch the ?123 button again to return to the number keyboard. To return to the letter keyboard, touch the ABC button. To use a capital character, touch the button with an upward-facing arrow. To use multiple capital characters, touch and hold the arrow button. To return to the lowercase keyboard, touch the arrow button again. To clear the last character, touch the button with a backward-facing arrow and an X.

HOW TO SET UP THE CONSOLE

Before using the treadmill for the first time, set up the console.

1. **Connect to your wireless network.**

   To access the internet, download iFit workouts, and use several other features of the console, the console must be connected to a wireless network.

   Follow the prompts on the screen to connect the console to your wireless network.

2. **Customize settings.**

   Fill in the form on the screen to set the console to display the desired unit of measurement and your time zone. Note: If you need to change these settings later, see HOW TO CHANGE CONSOLE SETTINGS on page 25.

3. **Log into or create an iFit account.**

   Provide your email address, and follow the prompts on the screen to sign up for or log into your iFit account.

4. **Tour the console.**

   The first time you turn on the treadmill, dialogue boxes on the screen will guide you through the features of the console.

5. **Check for firmware updates.**

   First, touch your name on the screen and touch the Settings button. Next, select the maintenance section. Then, touch the Update button to check for firmware updates using your wireless network. See HOW TO CHANGE CONSOLE SETTINGS on pages 25 and 26 for more information.

6. **Calibrate the incline system.**

   First, touch your name on the screen. Next, select the settings main menu. Then, select the maintenance section, touch the Calibrate Incline button, and then touch the Begin button to calibrate the incline system. See step 6 on page 26 for more information.

The console is now ready for you to begin working out. The following pages explain the various workouts and other features that the console offers.

To use the manual mode, see page 21. **To use a map workout,** see page 23. **To use a draw your own map workout,** see page 23. **To use a distance or time workout,** see page 24.

To change console settings, see page 25. **To use the wireless network mode,** see page 26. **To use the sound system with a Bluetooth® device,** see page 27. **To use the sound system with an audio cable,** see page 27. **To adjust the cushions,** see page 28.

IMPORTANT: If there are sheets of plastic on the console, remove the plastic. To prevent damage to the walking platform, wear clean athletic shoes while using the treadmill. The first time you use the treadmill, observe the alignment of the walking belt, and center the walking belt if necessary (see page 32).

HOW TO USE THE MANUAL MODE

1. **Insert the key into the console.**

   See HOW TO TURN ON THE POWER on page 19. **Note: It may take some time for the console to be ready for use.**

2. **Select the main menu.**

   When you turn on the power, the main menu will appear after the console boots up. If you are in a workout or the settings menu, touch the back arrow or the x on the screen to return to the main menu.

   Note: If you plan to use a wearable heart rate monitor with the console while you exercise, you must put on the wearable heart rate monitor **before you start the walking belt.** The console will automatically search for the wearable heart rate monitor for 30 seconds when you start the walking belt at the beginning of each workout.

3. **Start the walking belt and adjust the speed.**

   Press the Manual Start button on the screen or press the Start button on the console to start the walking belt. The walking belt will begin to move at a low speed. As you exercise, change the speed of the walking belt as desired by pressing the Speed increase and decrease buttons. Each time you press one of the buttons, the speed setting will change in small increments; if you hold down the button, the speed setting will change more quickly.

   If you press one of the numbered speed buttons, the walking belt will gradually change speed until it reaches the selected speed setting.

   To stop the walking belt, press the Stop button or touch the middle of the screen. To restart the walking belt, press the Start button.

4. **Change the incline of the treadmill as desired.**

   To change the incline of the treadmill, press the Incline increase and decrease buttons or one of the numbered incline buttons. Each time you press one of the buttons, the incline will gradually change until it reaches the selected incline setting.

   IMPORTANT: The first time you use the treadmill, you must calibrate the incline system (see step 6 on page 26).

5. **Monitor your progress with the display modes.**

   The console offers several display modes. The display mode that you select will determine which workout information is shown. To select the desired display mode or to view statistics and charts, drag down on the screen. You can also touch the + button on the screen to view stats or charts.

   As you walk or run on the treadmill, the screen can show the following workout information:

   - The incline level of the treadmill
   - Your vertical gain
   - Your vertical loss
   - The elapsed time
   - The approximate number of calories you have burned
   - The approximate number of calories you are burning per hour
   - Your heart rate (see step 6)
   - Your average heart rate
   - The distance that you have walked or run

- Your pace
- The speed of the walking belt
- The average speed of the walking belt
- A track representing 1/4 mile (400 m)

If desired, adjust the volume by pressing the volume buttons on the console.

To pause the workout, tap the screen or press the Stop button on the console. To continue the workout, touch *Resume* or press the Start button. To end the workout, touch the Finish button.

6. **Measure your heart rate if desired.**

If you use a wearable heart rate monitor, you must put it on **before you start the walking belt.** The console will automatically search for the wearable heart rate monitor for 30 seconds when you start the walking belt at the beginning of each workout.

Note: If you use the handgrip heart rate monitor and a wearable heart rate monitor at the same time, the wearable heart rate monitor will have priority.

For information about purchasing an optional wearable heart rate monitor, see page 28. Note: The console is compatible with Bluetooth Smart heart rate monitors.

Before using the handgrip heart rate monitor, remove the sheets of plastic from the metal contacts (G). In addition, make sure that your hands are clean.

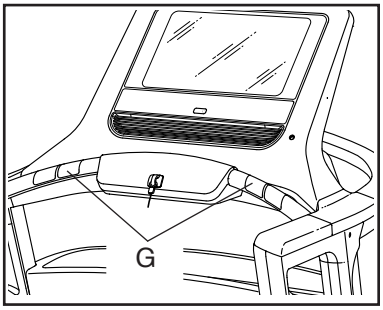

To measure your heart rate, **stand on the foot rails** and hold the contacts with your palms for approximately ten seconds; **avoid moving your hands.** When your pulse is detected, your heart rate will be shown. **For the most accurate heart rate reading, continue to hold the contacts for about 15 seconds.**

7. **Turn on the fan if desired.**

The fan features several speed settings. Press the fan buttons repeatedly to select a fan speed or to turn on or turn off the fan.

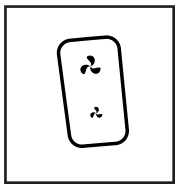

8. **When you are finished exercising, remove the key from the console.**

Step onto the walking platform and press the Stop button on the console or tap on the screen. Next, touch the End button. A workout summary will appear on the screen. If you wish to save your workout for future use, you can add it as a favorite by touching the heart button on the screen. You may also be able to either save or publish your results using one of the options on the screen. Then, remove the key from the console and put it in a secure place.

When you are finished using the treadmill, press the power switch into the off position and unplug the power cord. **IMPORTANT: If you do not do this, the treadmill's electrical components may wear prematurely.**

HOW TO USE A MAP WORKOUT

Note: To use a map workout, the console must be connected to a wireless network (see HOW TO USE THE WIRELESS NETWORK MODE on page 26).

1. **Insert the key into the console.**

   See HOW TO TURN ON THE POWER on page 19.

2. **Select the main menu or the workout library.**

   Touch the Home or Browse buttons on the screen to select either the main menu or the workout library.

3. **Select a workout.**

   To select a workout, touch the desired button on the screen. Note: The featured map workouts on your console will change periodically. If you wish to save your workout for future use, you can add it as a favorite by touching the heart button on the screen. You may also be able to either save or publish your results using one of the options on the screen. To draw your own map workout, see this page.

   The screen will show the duration and distance of the workout and the approximate number of calories you will burn during the workout.

4. **Start the workout.**

   Touch the Start button to start the workout. A moment after you touch the button, the walking belt will begin to move. Hold the handrails and begin walking.

   During the workout, a map on the screen will show your progress.

   The workout will function in the same way as the manual mode (see pages 21 to 22).

   When you reach the end of the workout, the walking belt will slow to a stop, and a workout summary will appear on the screen. After you view the workout summary, touch the Finish button to return to the main menu. You may also be able to either save or publish your results using one of the options on the screen.

5. **Monitor your progress with the display modes.**

   See step 5 on page 21.

6. **Measure your heart rate if desired.**

   See step 6 on page 22.

7. **Turn on the fan if desired.**

   See step 7 on page 22.

8. **When you are finished exercising, remove the key from the console.**

   See step 8 on page 22.

HOW TO USE A DRAW YOUR OWN MAP WORKOUT

Note: To use a draw your own map workout, the console must be connected to a wireless network (see HOW TO USE THE WIRELESS NETWORK MODE on page 26).

1. **Insert the key into the console.**

   See HOW TO TURN ON THE POWER on page 19.

2. **Select a draw your own map workout.**

   To select a draw your own map workout, touch the Create button on the screen.

3. **Draw your map.**

   Navigate to the area on the map where you want to draw your workout by sliding your fingers on the screen. Tap the screen to add the start point for your workout. Then, tap the screen to add the end point for your workout. Note: If you want to start and end the workout at the same point, use the Loop or Out & Back buttons on the left side of the screen. You can also select whether you want your workout to snap to the road.

If you make a mistake, press the Undo button on the left side of the screen.

The screen will display the elevation and distance statistics for your workout. If desired, you can change the default speed.

4. **Save your workout.**

   Touch the Save New Workout button on the screen. If desired, change the title of the workout or add a description, and then press the > symbol on the screen.

5. **Start the workout.**

   Touch the Start button on the screen to start the workout. A moment after you touch the button, the walking belt will begin to move. Hold the handrails and begin walking. See step 4 on page 23 for more information.

6. **Monitor your progress with the display modes.**

   See step 5 on page 21.

7. **Measure your heart rate if desired.**

   See step 6 on page 22.

8. **Turn on the fan if desired.**

   See step 7 on page 22.

9. **When you are finished exercising, remove the key from the console.**

   See step 8 on page 22.

HOW TO USE A DISTANCE OR TIME WORKOUT

Note: To use a distance or time workout, the console must be connected to a wireless network (see HOW TO USE THE WIRELESS NETWORK MODE on page 26). An iFit account is also required.

1. **Add workouts to your schedule on iFit.com.**

   On your computer, smartphone, tablet, or other device, open an internet browser, go to iFit.com, and sign in to your iFit account.

   Next, navigate to Menu > Library on the website. Browse the workout programs in the library and join the desired workouts.

   Then, navigate to Menu > Schedule to view your schedule. All of the workouts that you have joined will appear on your schedule; you can arrange or delete the workouts on your schedule as desired.

   Take time to explore the iFit.com website before you log out.

2. **Insert the key into the console.**

   See HOW TO TURN ON THE POWER on page 19.

3. **Select the main menu.**

   See step 2 on page 21.

4. **Log in to your iFit account.**

   If you have not already done so, touch the Login button to log in to your iFit account. The screen will ask for your iFit.com username and password. Enter them and touch the Submit button. Touch the Cancel button to exit the login screen.

5. **Select a distance or time workout that you have previously added to your schedule on iFit.com.**

   Touch the calendar icon to download a distance or time workout from your schedule.

   Note: Before workouts will download, you must add them to your schedule on iFit.com.

   When you select a distance or time workout, the screen will show the name, the estimated duration, and the distance of the workout.

6. **Start the workout.**

   Touch the Start button to start the workout. A moment after you touch the button, the walking belt will begin to move. Hold the handrails and begin walking.

   When you reach the end of the workout, the walking belt will slow to a stop, and a workout summary will appear on the screen. After you view the workout summary, touch the Finish button to return to the main menu. You may also be able to either save or publish your results using one of the options on the screen.

7. **Monitor your progress with the display modes.**

   See step 5 on page 21. The screen will show the elapsed distance or time and the remaining distance or time.

8. **Measure your heart rate if desired.**

   See step 6 on page 22.

9. **Turn on the fan if desired.**

   See step 7 on page 22.

10. **When you are finished exercising, remove the key from the console.**

    See step 8 on page 22.

For more information about iFit, go to iFit.com.

HOW TO CHANGE CONSOLE SETTINGS

IMPORTANT: Some of the settings and features described may not be enabled. Occasionally, a firmware update may cause your console to function slightly differently.

1. **Select the settings main menu.**

   First, turn on the power and insert the key into the console (see HOW TO TURN ON THE POWER on page 19). Note: It may take a few moments for the console to be ready for use.

   Next, select the main menu. When you turn on the console, the main menu will appear on the screen after the console boots up. If you are in a workout, touch the screen, touch *Pause*, touch *End*, and then touch *Finish* to return to the main menu.

   Next, touch the profile icon (person symbol) on the screen, and then touch *Settings*. The settings menu will appear on the screen.

2. **Navigate the settings menus and change settings as desired.**

   Slide or flick the screen to scroll upward or downward if necessary. To view a settings menu, simply touch the menu name. To exit a menu, touch the back button (arrow symbol). You may be able to view and change settings in the following settings menus:

   Account
   - My Profile
   - In Workout
   - Manage Accounts

   Equipment
   - Equipment Info
   - Equipment Settings
   - Maintenance
   - Wi-Fi

   About
   - Legal

3. **Customize the unit of measurement and other settings.**

   To customize the unit of measurement, the time zone, or other settings, touch *Equipment Settings*, and then touch the desired settings.

   The console can display speed and distance in either standard or metric units of measurement.

4. **View machine information.**

   Touch *Equipment Info*, and then touch *Machine Info* to view information about your treadmill.

5. **Update the console firmware.**

   For the best results, regularly check for firmware updates. Touch *Maintenance*, and then touch *Update* to check for firmware updates using your wireless network. The update will begin automatically. **IMPORTANT: To avoid damaging the treadmill, do not unplug the power adapter while the firmware is being updated.**

   The screen will show the progress of the update. When the update is complete, the treadmill will turn off and then turn back on. If it does not, unplug the power cord. Wait for several seconds, and then plug in the power power cord. Note: It may take a few minutes for the console to be ready for use.

   Note: Occasionally, a firmware update may cause the console to function slightly differently. These updates are always designed to improve your exercise experience.

6. **Calibrate the incline system of the treadmill.**

   Touch *Calibrate Incline*, then, touch *Begin* to calibrate the incline system. The treadmill will automatically rise to the maximum incline level, lower to the minimum incline level, and then return to the starting position. This will calibrate the incline system. Touch *Cancel* to return to the Maintenance section. When the incline system is calibrated, touch *Finish*.

   IMPORTANT: Keep pets, feet, and other objects away from the treadmill while the incline system is calibrating. In an emergency, pull the key from the console to stop the incline calibration.

7. **Exit the settings main menu.**

   If you are in a settings menu, touch the back button. Then, touch the close button (x symbol) to exit the settings main menu.

HOW TO USE THE WIRELESS NETWORK MODE

The console features a wireless network mode that allows you to set up a wireless network connection.

1. **Select the main menu.**

   See step 2 on page 21.

2. **Select the wireless network mode.**

   Touch your name on the screen, then touch the Wi-Fi® symbol to enter the wireless network mode.

3. **Enable Wi-Fi.**

   Make sure that Wi-Fi is enabled. If it is not, touch the Wi-Fi toggle to enable a wireless connection.

4. **Set up and manage a wireless network connection.**

   When Wi-Fi is enabled, the screen will show a list of available networks. Note: It may take several seconds for the list of wireless networks to appear.

Note: You must have your own wireless network and an 802.11b/g/n router with SSID broadcast enabled (hidden networks are not supported).

When a list of networks appears, touch the desired network. Note: You will need to know your network name (SSID). If your network has a password, you will also need to know the password.

An information box will ask if you want to connect to the wireless network. Touch the Connect button to connect to the network or touch the Cancel button to return to the list of networks. If the network has a password, touch the password entry box. A keyboard will appear on the screen. To view the password as you type it, touch the Show Password checkbox.

To use the keyboard, see HOW TO USE THE TOUCH SCREEN on page 19.

When the console is connected to your wireless network, a checkmark will appear next to the wireless network name. Then, touch the back button on the screen to return to the wireless network mode.

To disconnect from a wireless network, touch and hold the name of the wireless network, and then touch the Forget Network button.

If you are having problems connecting to an encrypted network, make sure that your password is correct. Note: Passwords are case-sensitive.

Note: The console supports unsecured and secured (WEP, WPA™, and WPA2™) encryption. A broadband connection is recommended; performance depends on connection speed.

Note: If you have questions after following these instructions, go to support.iFit.com for assistance.

5. **Exit the wireless network mode.**

   To exit the wireless network mode, touch the back button on the screen.

HOW TO USE THE SOUND SYSTEM WITH A BLUETOOTH DEVICE

1. **Place or hold your Bluetooth-enabled device near the console.**

2. **Turn on your device's Bluetooth setting.**

3. **Pair your device to the console.**

   Press and hold the Audio button on the console's speaker grill for 3 seconds. The Bluetooth speakers will enter pairing mode. When your device and the console pair successfully, the audio from your device will play through the console's speakers.

   Note: The console can save eight devices in its memory. If you have previously paired your device to the console, you can simply press the Bluetooth button to connect your device to the console.

4. **Erase the console's device memory if necessary.**

   If you need to erase all the Bluetooth-enabled devices saved in the console's memory, press and hold the Bluetooth button for 10 seconds.

HOW TO USE THE SOUND SYSTEM WITH AN AUDIO CABLE

To play music or audio books through the console sound system while you exercise, plug a 3.5 mm male to 3.5 mm male audio cable (not included) into the jack on the console and into a jack on your personal audio player; **make sure that the audio cable is fully plugged in. Note: To purchase an audio cable, see your local electronics store.**

Next, press the play button on your personal audio player. Adjust the volume level using the volume increase and decrease buttons on the console or the volume control on your personal audio player.

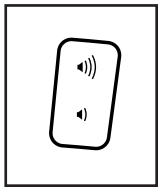

THE WEARABLE HEART RATE MONITOR

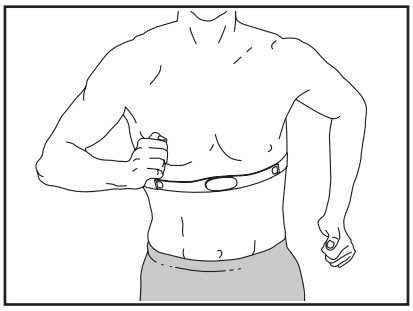

Whether your goal is to burn fat or to strengthen your cardiovascular system, the key to achieving the best results is to maintain the proper heart rate during your workouts. The optional wearable heart rate monitor will enable you to continuously monitor your heart rate while you exercise, helping you to reach your personal fitness goals. **To purchase a wearable heart rate monitor, please see the front cover of this manual.**

Note: The console is compatible with all Bluetooth Smart heart rate monitors.

HOW TO ADJUST THE CUSHIONS

The treadmill features a cushioning system that reduces the impact as you walk or run on the treadmill.

To adjust the cushions, **first remove the key from the console and unplug the power cord.** You may also need to place the treadmill in the storage position (see HOW TO FOLD THE TREADMILL on page 29).

For a more firm walking platform, turn a cushion to the position shown in drawing 1; for a less firm walking platform, turn the cushion to the position shown in drawing 2. Adjust the other cushions in the same way. **IMPORTANT: Make sure that the cushions on the left and right sides of the treadmill are set to the same firmness level. The faster you run on the treadmill, or the more you weigh, the firmer the walking platform should be.**

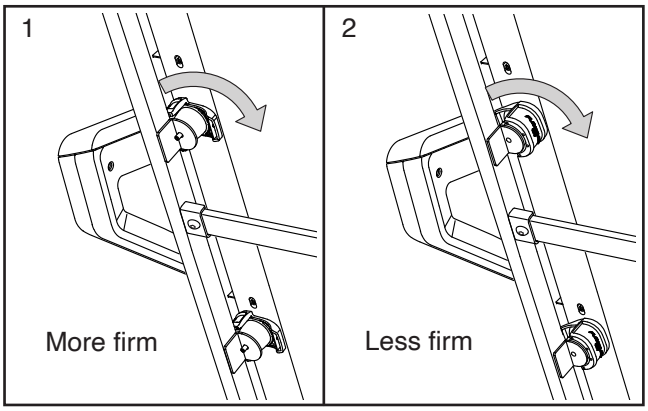

HOW TO FOLD AND MOVE THE TREADMILL

HOW TO FOLD THE TREADMILL

To avoid damaging the treadmill, adjust the incline to zero before you fold the treadmill. Then, remove the key and unplug the power cord. CAUTION: You must be able to safely lift 45 lbs. (20 kg) to raise, lower, or move the treadmill.

1. Hold the metal frame (A) firmly in the location shown by the arrow below. **CAUTION: Do not hold the frame by the plastic foot rails. Bend your legs and keep your back straight.**

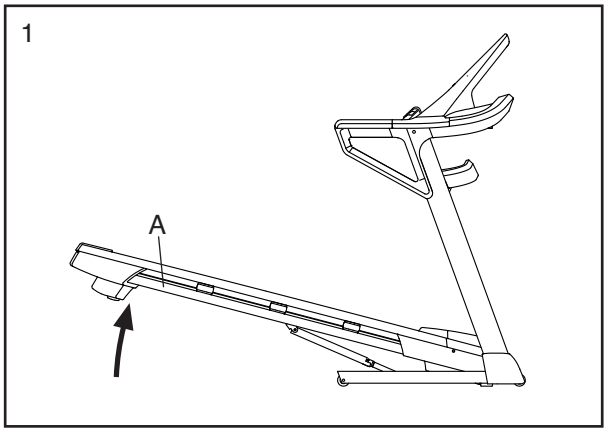

2. Raise the frame (A) until the storage latch (B) locks in the storage position. **CAUTION: Make sure that the storage latch locks.**

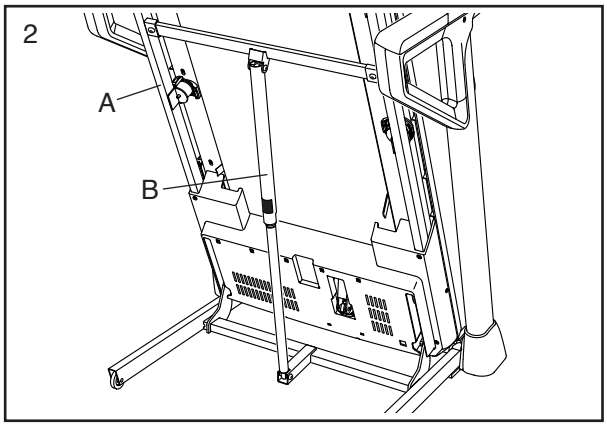

To protect the floor or carpet, place a mat under the treadmill. Keep the treadmill out of direct sunlight. Do not leave the treadmill in the storage position in temperatures above 85°F (30°C).

HOW TO MOVE THE TREADMILL

Before moving the treadmill, fold it as described at the left. **CAUTION: Make sure that the storage latch is in the locked position. Moving the treadmill may require two people.**

Hold the handrails (C) with both hands and carefully push the treadmill to the desired location. **CAUTION: Do not pull on the frame, and do not move the treadmill over an uneven surface.**

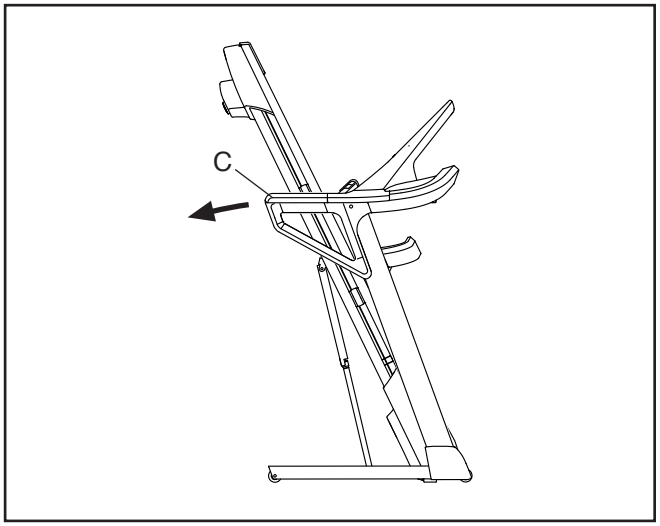

HOW TO LOWER THE TREADMILL FOR USE

1. Push the upper end of the frame forward, and gently press the upper part of the storage latch with your foot at the same time.

2. While pressing the storage latch with your foot, pull the upper end of the frame toward yourself.

3. Step back and let the frame lower to the floor.

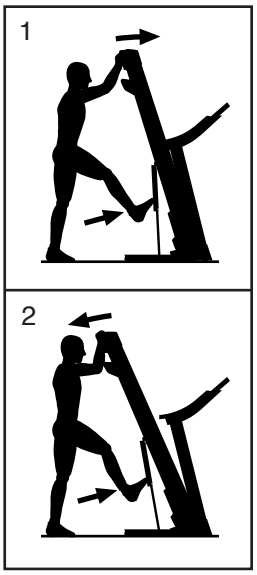

MAINTENANCE AND TROUBLESHOOTING

MAINTENANCE

Regular maintenance is important for optimal performance and to reduce wear. Inspect and properly tighten all parts each time the treadmill is used. Replace any worn parts immediately. Use only manufacturer-supplied parts.

Regularly clean the treadmill and keep the walking belt clean and dry. First, **press the power switch into the off position and unplug the power cord.** Wipe exterior parts of the treadmill with a damp cloth and a small amount of mild soap. **IMPORTANT: Do not spray liquids directly onto the treadmill. To avoid damage to the console, keep liquids away from the console.** Then, thoroughly dry the treadmill with a soft towel.

TROUBLESHOOTING

Most treadmill problems can be solved by following the simple steps below. Find the symptom that applies, and follow the steps listed. If further assistance is needed, see the front cover of this manual.

SYMPTOM: The power does not turn on

a. If an extension cord is needed, use only a 3-conductor, 14-gauge (2 mm^2) cord that is no longer than 5 ft. (1.5 m).

b. After the power cord has been plugged in, make sure that the key is inserted into the console.

c. Check the power switch located on the treadmill frame near the power cord. If the switch protrudes as shown, the switch has tripped. To reset the power switch, wait for five minutes and then press the switch back in.

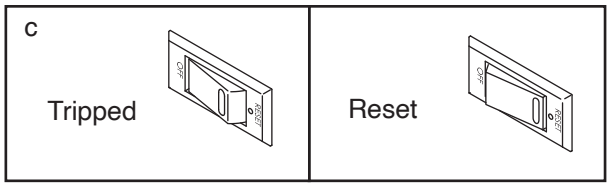

SYMPTOM: The power turns off during use

a. Check the power switch (see the drawing above). If the switch has tripped, wait for five minutes and then press the switch back in.

b. Make sure that the power cord is plugged in. If the power cord is plugged in, unplug it, wait for five minutes, and then plug it back in.

c. Remove the key from the console, and then reinsert it.

d. If the treadmill still will not run, please see the front cover of this manual.

SYMPTOM: The incline of the treadmill does not change correctly

a. Calibrate the incline system of the treadmill (see step 6 on page 26). When the incline system is calibrated, remove the key from the console.

SYMPTOM: The displays of the console do not function properly

a. Remove the key from the console and **UNPLUG THE POWER CORD.** Next, remove the five #8 x 3/4" Screws (2), and carefully pivot off the Motor Hood (65).

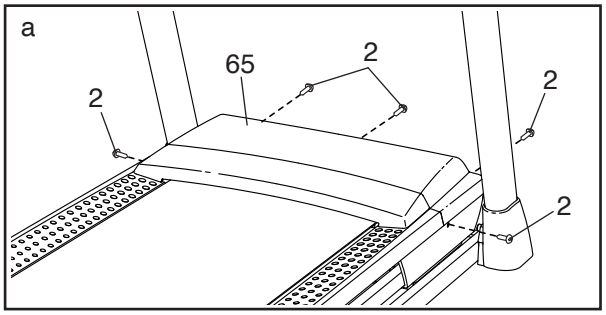

Next, locate the Reed Switch (109) and the Magnet (111) on the left side of the Pulley (49). Turn the Pulley until the Magnet is aligned with the Reed Switch. **Make sure that the gap between the Magnet and the Reed Switch is about 1/8 in. (3 mm).** If necessary, loosen the #8 x 3/4" Truss Head Screw (117), move the Reed Switch slightly, and then retighten the Screw. Reattach the Motor Hood (see above), and walk on the treadmill for a few minutes to check for a correct speed reading.

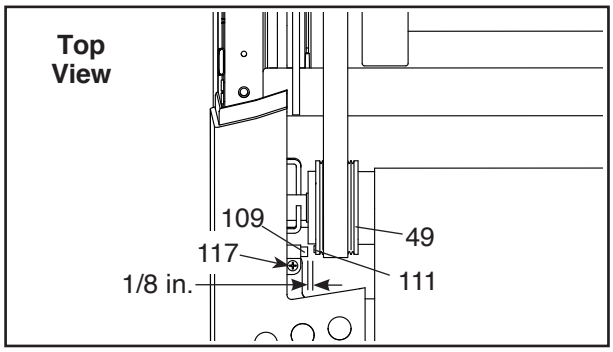

SYMPTOM: The treadmill will not connect to the wireless network

a. Make sure that the wireless settings on the console are correct (see page 26).

b. Make sure that the settings for your wireless network are correct.

c. If you still have questions, go to support.iFit.com.

SYMPTOM: The displays of the console do not function properly

a. If the console does not boot up properly, or if the console freezes and does not respond, reset the console to the factory default settings.
IMPORTANT: Doing this will erase all the custom settings you have made to the console. Resetting the console requires two people. First, press the power switch into the off position. Next, locate the small reset opening (A) on the right side of the console. Using a bent paper clip (B), press and hold the reset button inside the opening, and have a second person press the power switch into the on (reset) position. Continue holding the reset button (A) until the console turns on. When the reset operation is complete, the console will turn off and then turn back on. If it does not, use the power switch to turn the treadmill off and then on again. Once the console turns on, check for firmware updates (see HOW TO CHANGE CONSOLE SETTINGS on page 25). Note: It may take a few minutes for the console to be ready for use.

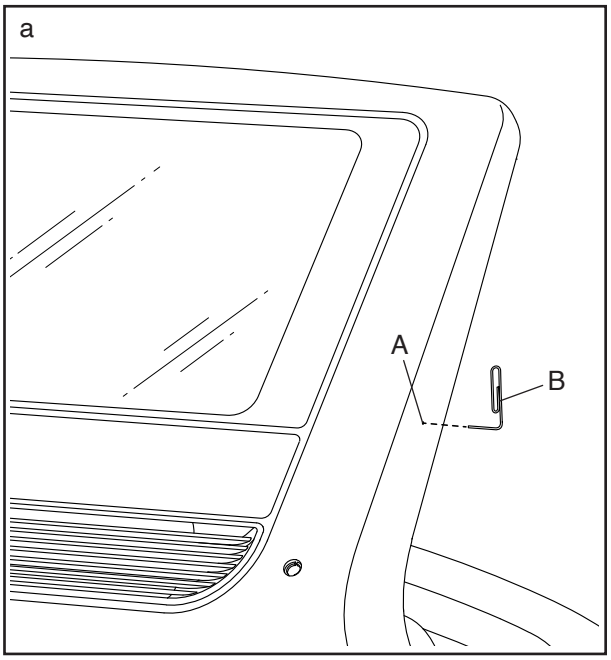

SYMPTOM: The walking belt slows when walked on

a. If an extension cord is needed, use only a 3-conductor, 14-gauge (2 mm^2) cord that is no longer than 5 ft. (1.5 m).

b. If the walking belt is overtightened, treadmill performance may decrease and the walking belt may become damaged. Remove the key and **UNPLUG THE POWER CORD.** Using the hex key, turn both idler roller screws (C) counterclockwise, 1/4 of a turn. When the walking belt is properly tightened, you should be able to lift each edge of the walking belt 2 to 3 in. (5 to 7 cm) off the walking platform. Be careful to keep the walking belt centered. Then, plug in the power cord, insert the key, and walk on the treadmill for a few minutes. Repeat until the walking belt is properly tightened.

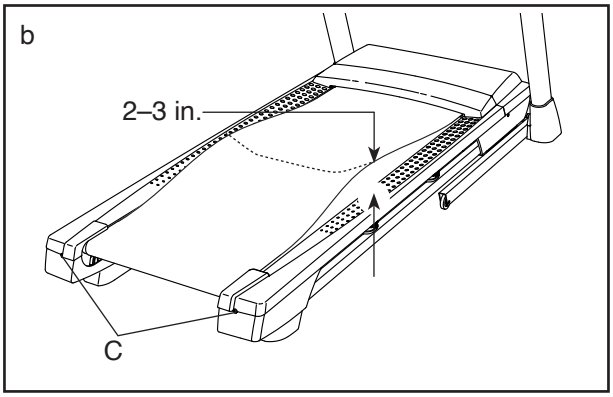

c. Your treadmill features a walking belt coated with high-performance lubricant. **IMPORTANT: Never apply silicone spray or other substances to the walking belt or the walking platform unless instructed to do so by an authorized service representative. Such substances may deteriorate the walking belt and cause excessive wear.** If you suspect that the walking belt needs more lubricant, see the front cover of this manual.

d. If the walking belt still slows when walked on, see the front cover of this manual.

SYMPTOM: The walking belt is not centered between the foot rails

a. **IMPORTANT: If the walking belt rubs against the foot rails (D), the walking belt may become damaged.** First, remove the key and **UNPLUG THE POWER CORD. If the walking belt has shifted to the left,** use the hex key to turn the left idler roller screw clockwise 1/2 of a turn; **if the walking belt has shifted to the right,** turn the left idler roller screw counterclockwise 1/2 of a turn. Be careful not to overtighten the walking belt. Then, plug in the power cord, insert the key, and walk on the treadmill for a few minutes. Repeat until the walking belt is centered.

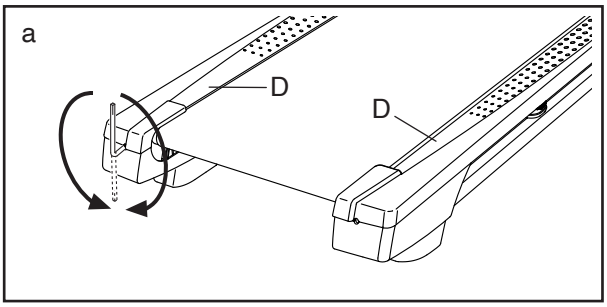

SYMPTOM: The walking belt slips when walked on

a. First, remove the key and **UNPLUG THE POWER CORD.** Using the hex key, turn both idler roller screws clockwise, 1/4 of a turn. When the walking belt is correctly tightened, you should be able to lift each edge of the walking belt 2 to 3 in. (5 to 7 cm) off the walking platform. Be careful to keep the walking belt centered. Then, plug in the power cord, insert the key, and walk on the treadmill for a few minutes. Repeat until the walking belt is properly tightened.

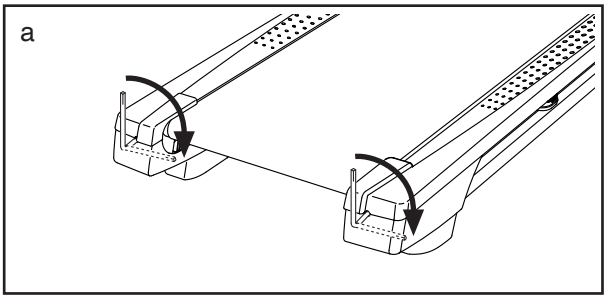

EXERCISE GUIDELINES

⚠ WARNING: Before beginning this or any exercise program, consult your physician. This is especially important for persons over age 35 or persons with pre-existing health problems.

The heart rate monitor is not a medical device. Various factors may affect the accuracy of heart rate readings. The heart rate monitor is intended only as an exercise aid in determining heart rate trends in general.

These guidelines will help you to plan your exercise program. For detailed exercise information, obtain a reputable book or consult your physician. Remember, proper nutrition and adequate rest are essential for successful results.

EXERCISE INTENSITY

Whether your goal is to burn fat or to strengthen your cardiovascular system, exercising at the proper intensity is the key to achieving results. You can use your heart rate as a guide to find the proper intensity level. The chart below shows recommended heart rates for fat burning and aerobic exercise.

165	*155*	*145*	*140*	*130*	*125*	*115*	♥
145	*138*	*130*	*125*	*118*	*110*	*103*	♥
125	*120*	*115*	*110*	*105*	*95*	*90*	♥
20	*30*	*40*	*50*	*60*	*70*	*80*	

To find the proper intensity level, find your age at the bottom of the chart (ages are rounded off to the nearest ten years). The three numbers listed above your age define your "training zone." The lowest number is the heart rate for fat burning, the middle number is the heart rate for maximum fat burning, and the highest number is the heart rate for aerobic exercise.

Burning Fat—To burn fat effectively, you must exercise at a low intensity level for a sustained period of time. During the first few minutes of exercise, your body uses carbohydrate calories for energy. Only after the first few minutes of exercise does your body begin to use stored fat calories for energy. If your goal is to burn fat, adjust the intensity of your exercise until your heart rate is near the lowest number in your training zone. For maximum fat burning, exercise with your heart rate near the middle number in your training zone.

Aerobic Exercise—If your goal is to strengthen your cardiovascular system, you must perform aerobic exercise, which is activity that requires large amounts of oxygen for prolonged periods of time. For aerobic exercise, adjust the intensity of your exercise until your heart rate is near the highest number in your training zone.

WORKOUT GUIDELINES

Warming Up—Start with 5 to 10 minutes of stretching and light exercise. A warm-up increases your body temperature, heart rate, and circulation in preparation for exercise.

Training Zone Exercise—Exercise for 20 to 30 minutes with your heart rate in your training zone. (During the first few weeks of your exercise program, do not keep your heart rate in your training zone for longer than 20 minutes.) Breathe regularly and deeply as you exercise; never hold your breath.

Cooling Down—Finish with 5 to 10 minutes of stretching. Stretching increases the flexibility of your muscles and helps to prevent post-exercise problems.

EXERCISE FREQUENCY

To maintain or improve your condition, complete three workouts each week, with at least one day of rest between workouts. After a few months of regular exercise, you may complete up to five workouts each week, if desired. Remember, the key to success is to make exercise a regular and enjoyable part of your everyday life.

PART LIST

Model No. NTL14020-INT.0 R0521A

Key No.	Qty.	Description
1	16	#8 x 1/2" Screw
2	74	#8 x 3/4" Screw
3	1	5/16" x 2 1/4" Bolt
4	6	5/16" x 3/4" Patch Screw
5	4	#10 Star Washer
6	5	5/16" x 1 3/4" Bolt
7	4	3/8" x 2 1/4" Screw
8	2	5/16" x 3/4" Screw
9	4	#10 x 3/4" Screw
10	2	#8 x 1/2" Ground Screw
11	12	5/16" Star Washer
12	2	5/16" x 1 3/4" Screw
13	8	3/8" Star Washer
14	2	#8 x 1" Screw
15	3	1/4" x 2 1/2" Screw
16	1	3/8" x 1 1/2" Bolt
17	2	3/8" x 1 1/2" Wheel Bolt
18	2	Cover Bracket
19	4	#8 x 7/16" Screw
20	2	5/16" Motor Screw
21	2	3/8" Pin
22	2	3/8" x 1 1/8" Bolt
23	2	3/8" Washer
24	4	#8 Star Washer
25	1	Left Handrail Cover
26	1	Right Handrail Cover
27	1	Small Console Cover
28	4	5/16" x 2 1/2" Screw
29	1	3/8" x 1 3/4" Hex Head Bolt
30	4	5/16" Flat Washer
31	1	Tray
32	1	Console Frame
33	6	3/8" Jam Nut
34	6	5/16" Nut
35	13	1/4" Nut
36	1	Console Base Cover
37	6	#8 x 5/8" Screw
38	1	Console Cover
39	6	Isolator
40	2	Rear Foot
41	1	Latch Crossbar
42	1	Left Foot Rail
43	1	Caution Decal
44	1	Walking Platform
45	1	Walking Belt
46	2	Belt Guide
47	1	Right Rear Foot
48	4	Cable Tie
49	1	Drive Roller/Pulley
50	2	1/4" x 1 1/4" Screw
51	2	9/32" Plastic Bushing
52	4	3/8" Plastic Bushing
53	1	Storage Latch
54	1	Drive Motor
55	1	Motor Belt
56	1	Frame
57	1	Left Rear Foot
58	3	Console Ground Wire
59	4	Rubber Cushion
60	1	Right Foot Rail
61	1	Idler Roller
62	2	3/8" x 1 3/4" Screw
63	2	3/8" x 1 1/4" Screw
64	1	Console Base
65	1	Motor Hood
66	1	Hood Accent
67	2	Incline Frame Spacer
68	5	Clip
69	1	Incline Motor
70	1	Incline Frame
71	2	Frame Spacer
72	1	Controller
73	1	Controller Plate
74	1	Receptacle
75	1	Power Switch
76	1	Power Cord
77	1	Grommet
78	1	Belly Pan
79	1	Left Rear Handrail Cover
80	1	Console
81	1	Upright Wire
82	1	Left Base Cover
83	1	Right Base Cover
84	1	Controller Clamp
85	1	Right Rear Handrail Cover
86	1	Right Handrail
87	1	Left Outside Handrail Cover
88	1	Left Inside Handrail Cover
89	1	Left Upright
90	1	Right Upright
91	2	Warning Decal
92	1	Fan
93	1	Pulse Crossbar
94	1	Base
95	1	Right Inside Handrail Cover
96	1	Right Outside Handrail Cover
97	2	Base Pad
98	4	#3 x 1/2" Screw
99	1	Left Inner Base Cover
100	1	Right Inner Base Cover

Key No.	Qty.	Description
101	4	Wheel
102	1	Key/Clip
103	1	Console Base Frame
104	3	Cable Tie
105	1	Upright Crossbar
106	2	Incline Motor Spacer
107	1	Pulse Cover
108	6	#8 x 1/2" Washer Head Screw
109	1	Reed Switch
110	1	Clamp
111	1	Magnet
112	2	Motor Bushing
113	2	#8 Nut
114	2	#8 x 1/2" Machine Screw
115	1	Filter
116	1	Motor Isolator
117	1	#8 x 3/4" Truss Head Screw
118	1	Left Handrail
*	–	User's Manual

Note: Specifications are subject to change without notice. For information about ordering replacement parts, see the back cover of this manual. *These parts are not illustrated.

EXPLODED DRAWING A

Model No. NTL14020-INT.0 R0521A

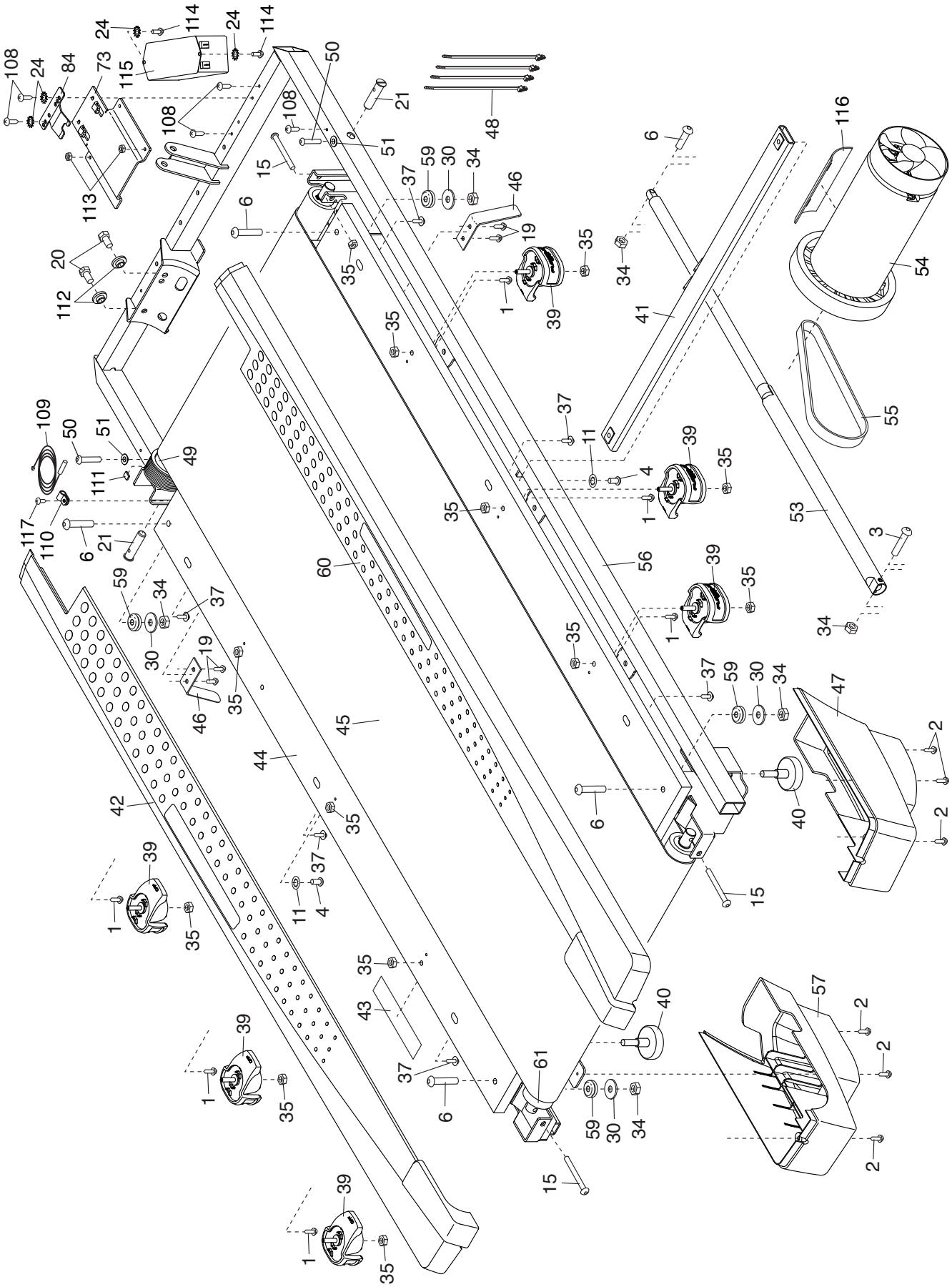

EXPLODED DRAWING B

Model No. NTL14020-INT.0 R0521A

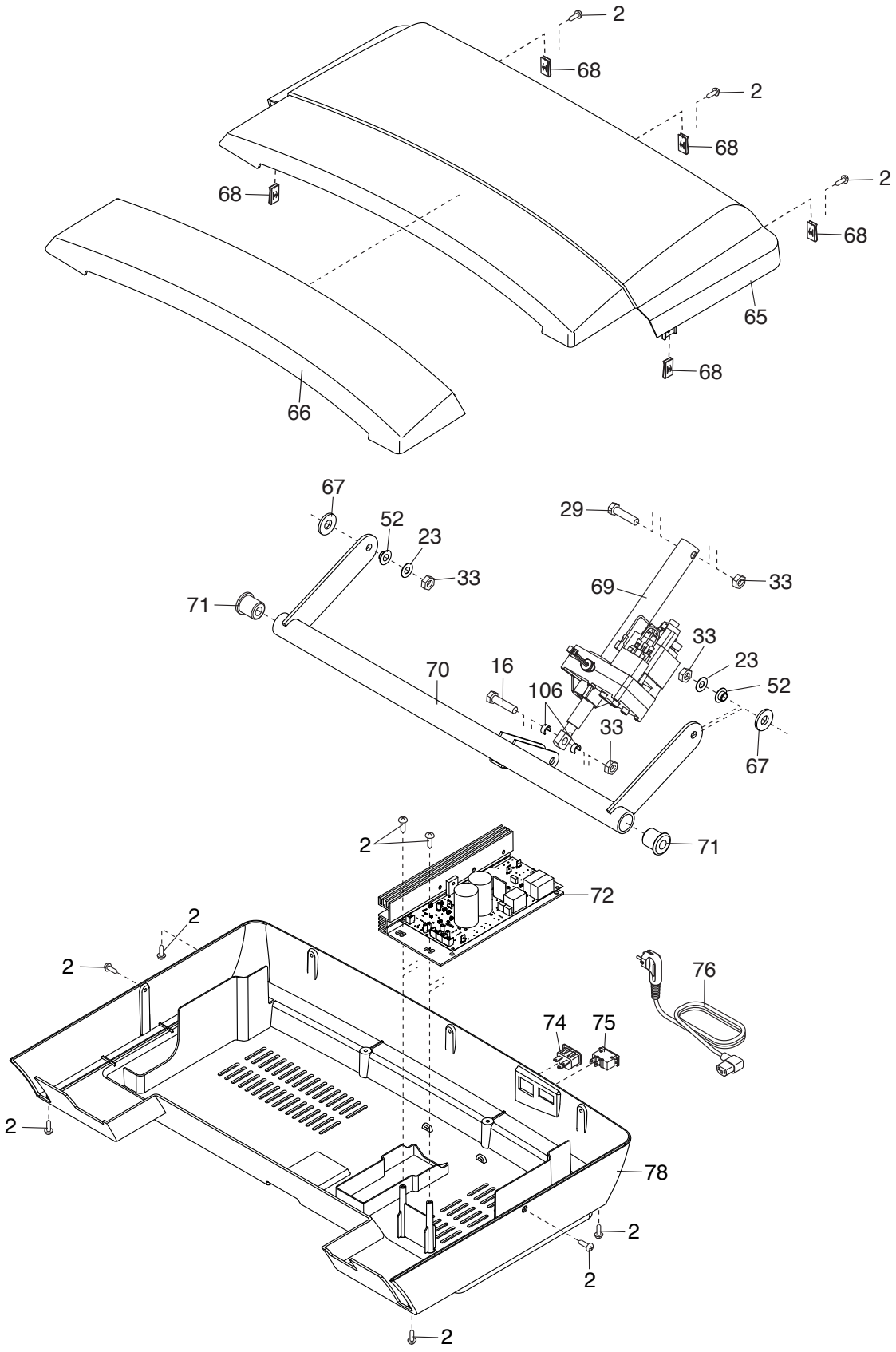

EXPLODED DRAWING C

Model No. NTL14020-INT.0 R0521A

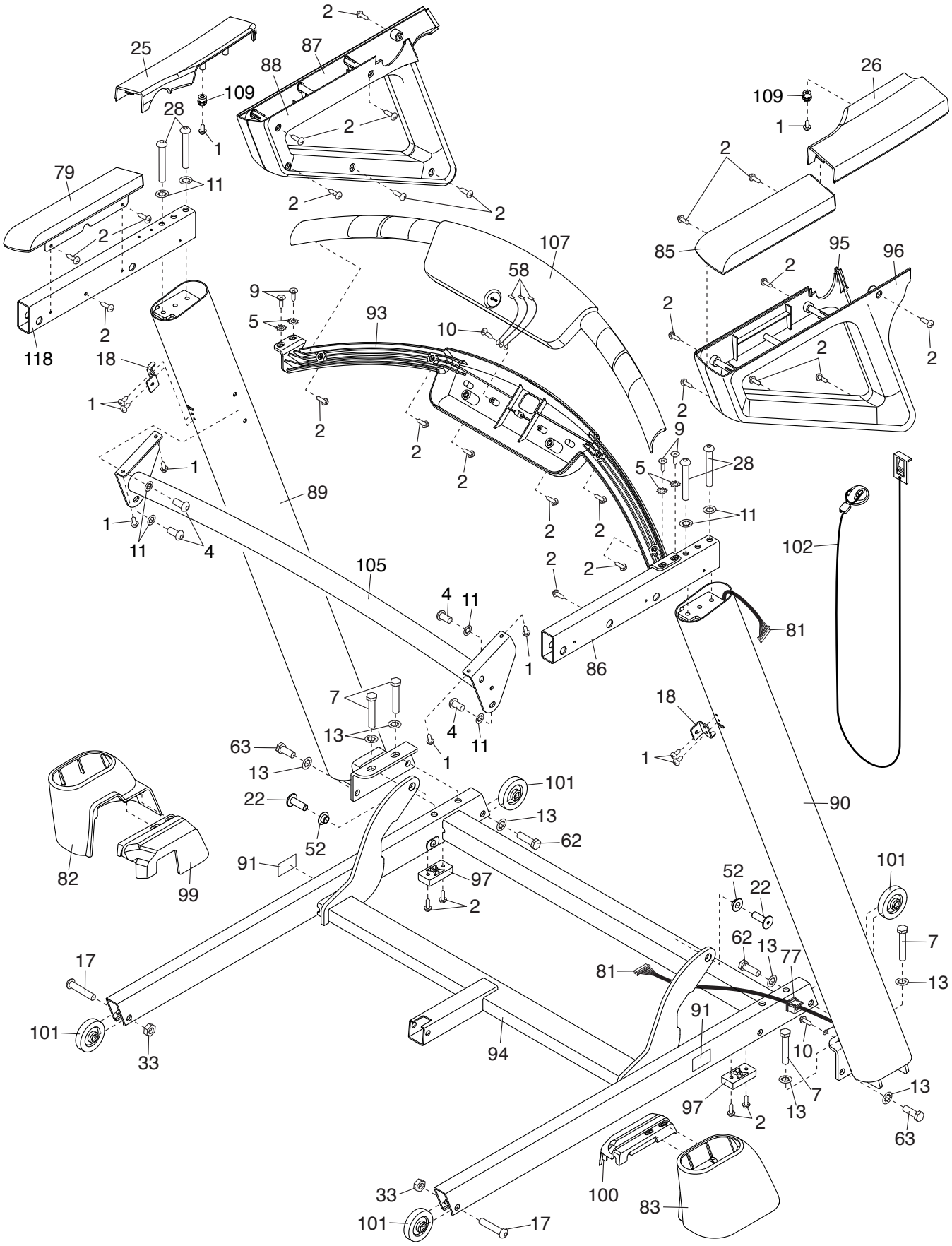

EXPLODED DRAWING D

Model No. NTL14020-INT.0 R0521A

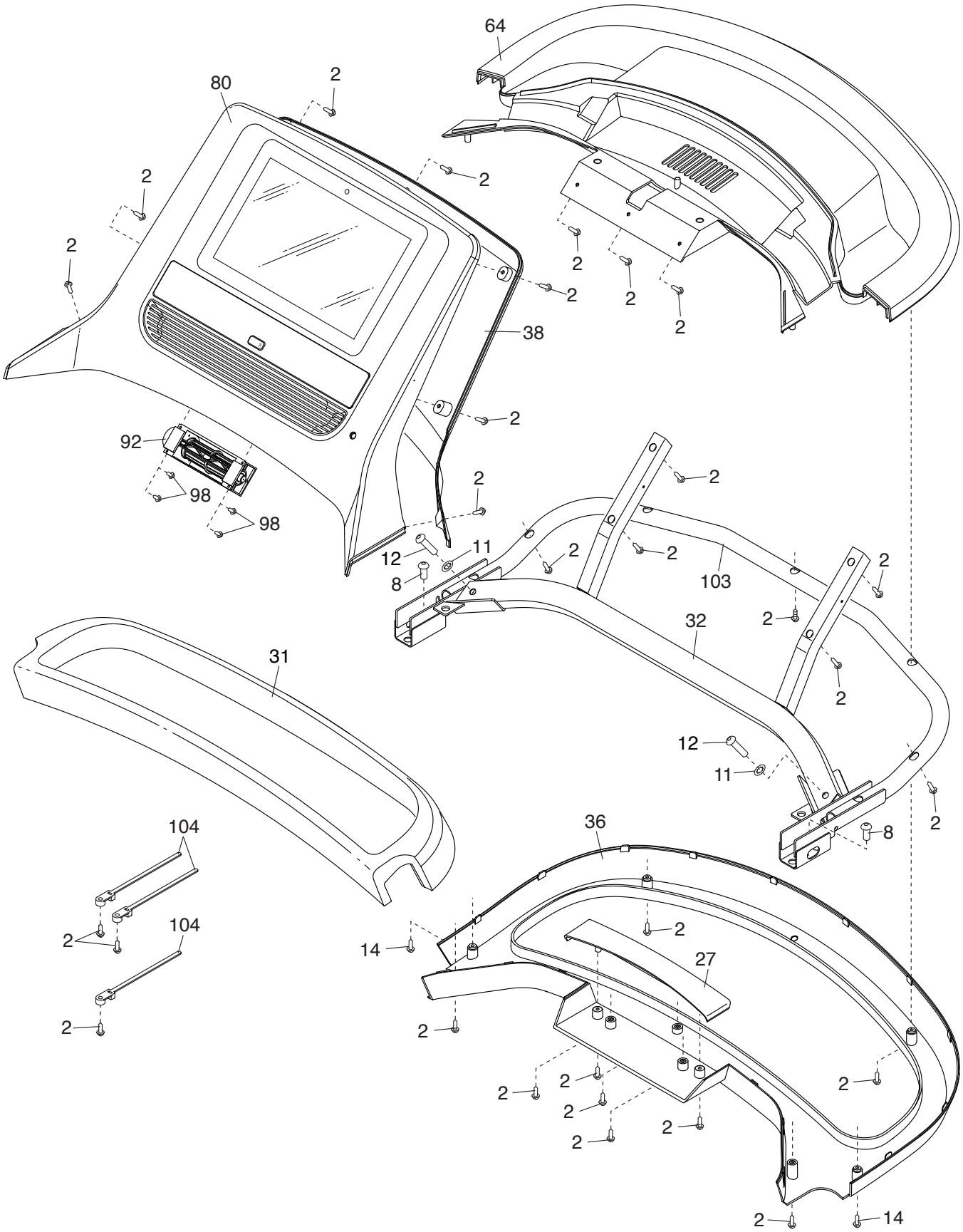

ORDERING REPLACEMENT PARTS

To order replacement parts, please see the front cover of this manual. To help us assist you, be prepared to provide the following information when contacting us:

- the model number and serial number of the product (see the front cover of this manual)
- the name of the product (see the front cover of this manual)
- the key number and description of the replacement part(s) (see the PART LIST and the EXPLODED DRAWING near the end of this manual)

RECYCLING INFORMATION

This electronic product must not be disposed of in municipal waste. To preserve the environment, this product must be recycled after its useful life as required by law.

Please use recycling facilities that are authorized to collect this type of waste in your area. In doing so, you will help to conserve natural resources and improve European standards of environmental protection. If you require more information about safe and correct disposal methods, please contact your local city office or the establishment where you purchased this product.

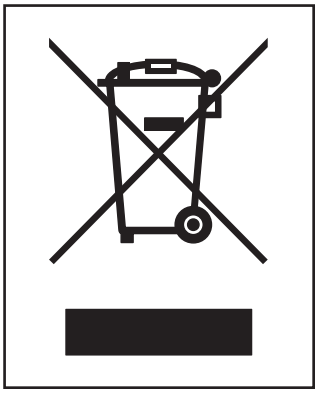

Part No. 430202 R0521A

Printed in China © 2021 ICON Health & Fitness, Inc.