NordicTrack® T 14.0

Model No. NETL14917.0
Serial No. _____

Write the serial number in the space above for reference.

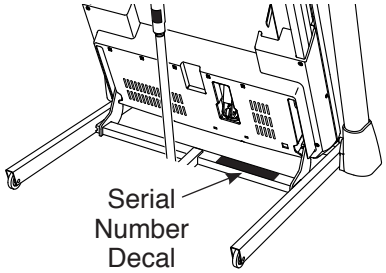

CUSTOMER SERVICE

UNITED KINGDOM
Call: 0330 123 1045
From Ireland: 053 92 36102
Website: iconsupport.eu
E-mail: csuk@iconeurope.com
Write:
ICON Health & Fitness, Ltd.
Unit 4, Westgate Court
Silkwood Park
OSSETT
WF5 9TT
UNITED KINGDOM

AUSTRALIA
Call: 1800 993 770
E-mail: australiacc@iconfitness.com
Write:
ICON Health & Fitness
PO Box 635
WINSTON HILLS NSW 2153
AUSTRALIA

⚠ CAUTION

Read all precautions and instructions in this manual before using this equipment. Save this manual for future reference.

USER'S MANUAL

iconeurope.com

TABLE OF CONTENTS

WARNING DECAL PLACEMENT 2
IMPORTANT PRECAUTIONS 3
BEFORE YOU BEGIN 5
PART IDENTIFICATION CHART 6
ASSEMBLY 7
HOW TO USE THE TREADMILL 16
HOW TO FOLD AND MOVE THE TREADMILL 32
MAINTENANCE AND TROUBLESHOOTING 33
EXERCISE GUIDELINES 36
PART LIST 38
EXPLODED DRAWING 40
ORDERING REPLACEMENT PARTS . . . . . Back Cover
RECYCLING INFORMATION . . . . . Back Cover

WARNING DECAL PLACEMENT

This drawing shows the locations of the warning decals. **If a decal is missing or illegible, call the telephone number on the front cover of this manual and request a free replacement decal. Apply the decal in the location shown.** Note: The decals may not be shown at actual size.

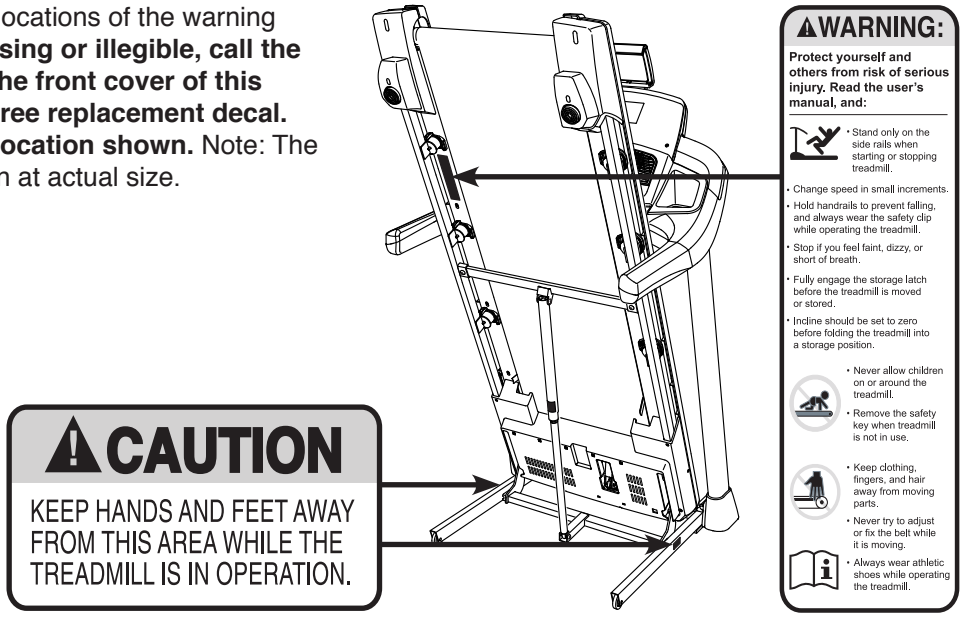

NORDICTRACK and IFIT are registered trademarks of ICON Health & Fitness, Inc. App Store is a trademark of Apple Inc., registered in the U.S. and other countries. Android and Google Play are trademarks of Google Inc. The BLUETOOTH® word mark and logos are registered trademarks of Bluetooth SIG, Inc. and are used under license. IOS is a trademark or registered trademark of Cisco in the U.S. and other countries and is used under license.

IMPORTANT PRECAUTIONS

⚠WARNING: To reduce the risk of burns, fire, electric shock, or injury to persons, read all important precautions and instructions in this manual and all warnings on your treadmill before using your treadmill. ICON assumes no responsibility for personal injury or property damage sustained by or through the use of this product.

1. It is the responsibility of the owner to ensure that all users of this treadmill are adequately informed of all warnings and precautions.

2. Before beginning any exercise program, consult your physician. This is especially important for persons over age 35 or persons with pre-existing health problems.

3. The treadmill is not intended for use by persons with reduced physical, sensory, or mental capabilities or lack of experience and knowledge, unless they have been given supervision or instruction concerning use of the treadmill by someone responsible for their safety.

4. Use the treadmill only as described in this manual.

5. The treadmill is intended for home use only. Do not use the treadmill in any commercial, rental, or institutional setting.

6. Keep the treadmill indoors, away from moisture and dust. Do not put the treadmill in a garage or covered patio, or near water.

7. Place the treadmill on a level surface, with at least 8 ft. (2.4 m) of clearance behind it and 2 ft. (0.6 m) on each side. Do not place the treadmill on any surface that blocks air openings. To protect the floor or carpet from damage, place a mat under the treadmill.

8. Do not operate the treadmill where aerosol products are used or where oxygen is being administered.

9. Keep children under age 13 and pets away from the treadmill at all times.

10. The treadmill should be used only by persons weighing 300 lbs. (135 kg) or less.

11. Never allow more than one person on the treadmill at a time.

12. Wear appropriate exercise clothes while using the treadmill. Do not wear loose clothes that could become caught in the treadmill. Athletic support clothes are recommended for both men and women. *Always wear athletic shoes. Never use the treadmill with bare feet, wearing only stockings, or in sandals.*

13. When connecting the power cord (see page 16), plug the power cord into an earthed circuit. No other appliance should be on the same circuit. When replacing the fuse in the power cord adapter, insert an ASTA-approved BS1362, 13-amp fuse into the fuse carrier.

14. If an extension cord is needed, use only a 3-conductor, 14-gauge (1 mm^2) cord that is no longer than 5 ft. (1.5 m).

15. Keep the power cord away from heated surfaces.

16. Never move the walking belt while the power is turned off. Do not operate the treadmill if the power cord or plug is damaged, or if the treadmill is not working properly. (See MAINTENANCE AND TROUBLESHOOTING on page 33 if the treadmill is not working properly.)

17. Read, understand, and test the emergency stop procedure before using the treadmill (see HOW TO TURN ON THE POWER on page 18). Always wear the clip while using the treadmill.

18. Always stand on the foot rails when starting or stopping the walking belt. Always hold the handrails while using the treadmill.

19. When a person is walking on the treadmill, the noise level of the treadmill will increase.

20. Keep fingers, hair, and clothing away from the moving walking belt.

21. The treadmill is capable of high speeds. Adjust the speed in small increments to avoid sudden jumps in speed.

22. The heart rate monitor is not a medical device. Various factors, including the user's movement, may affect the accuracy of heart rate readings. The heart rate monitor is intended only as an exercise aid in determining heart rate trends in general.

23. Never leave the treadmill unattended while it is running. Always remove the key, press the power switch into the off position (see the drawing on page 5 for the location of the power switch), and unplug the power cord when the treadmill is not in use.

24. Do not attempt to move the treadmill until it is properly assembled. (See ASSEMBLY on page 7 and HOW TO FOLD AND MOVE THE TREADMILL on page 32.) You must be able to safely lift 45 lbs. (20 kg) to move the treadmill.

25. When folding or moving the treadmill, make sure that the storage latch is holding the frame securely in the storage position. Do not operate the treadmill while it is folded.

26. Do not change the incline of the treadmill by placing objects under the treadmill.

27. Never insert any object into any opening on the treadmill.

28. Inspect and properly tighten all parts each time the treadmill is used.

29. **DANGER:** Always unplug the power cord immediately after use, before cleaning the treadmill, and before performing the maintenance and adjustment procedures described in this manual. Never remove the motor hood unless instructed to do so by an authorized service representative. Servicing other than the procedures in this manual should be performed by an authorized service representative only.

30. Over exercising may result in serious injury or death. If you feel faint, if you become short of breath, or if you experience pain while exercising, stop immediately and cool down.

SAVE THESE INSTRUCTIONS

BEFORE YOU BEGIN

Thank you for selecting the new NORDICTRACK® T 14.0 treadmill. The T 14.0 treadmill provides an impressive selection of features designed to make your workouts at home more effective and enjoyable.

For your benefit, read this manual carefully before you use the treadmill. If you have questions after reading this manual, please see the front cover of this manual. To help us assist you, note the product model number and serial number before contacting us. The model number and the location of the serial number decal are shown on the front cover of this manual.

Before reading further, please familiarize yourself with the parts that are labeled in the drawing below.

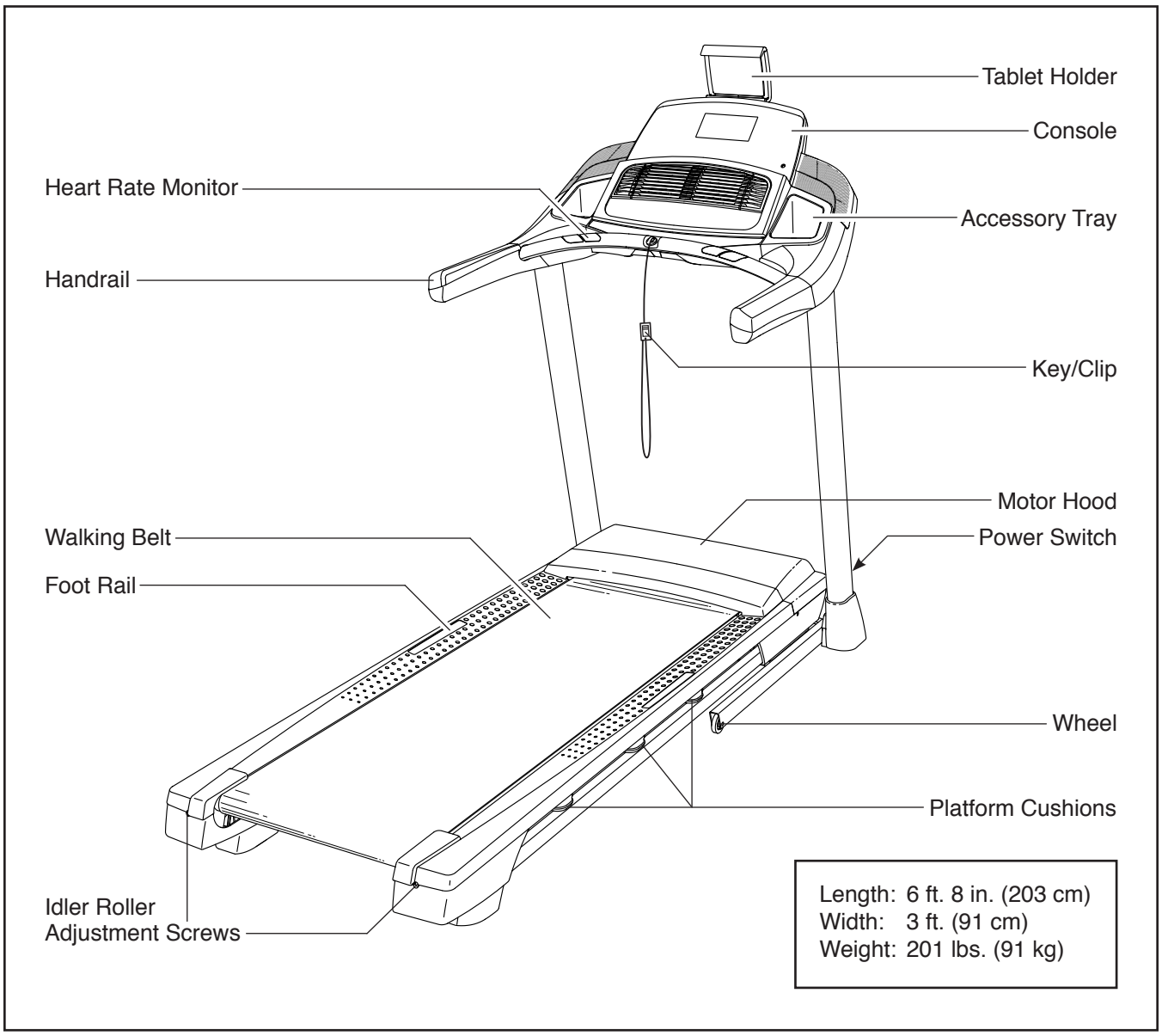

PART IDENTIFICATION CHART

Use the drawings below to identify small parts used for assembly. The number in parentheses below each drawing is the key number of the part, from the PART LIST near the end of this manual. The number following the key number is the quantity used for assembly. **Note: If a part is not in the hardware kit, check to see whether it is preattached. Extra parts may be included.**

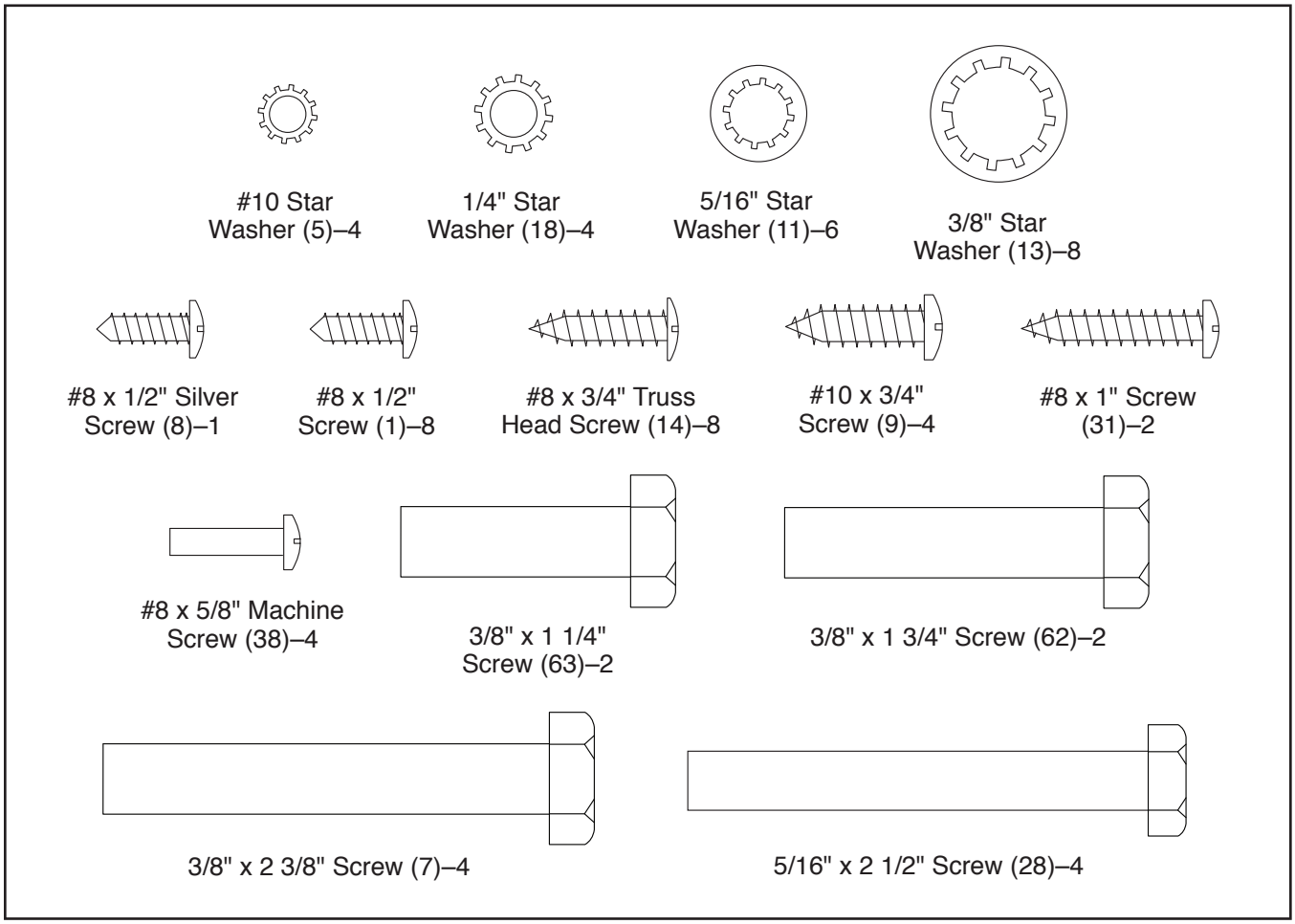

ASSEMBLY

- Assembly requires two persons.
- Place all parts in a cleared area and remove the packing materials. Do not dispose of the packing materials until you finish all assembly steps.
- After shipping, there may be an oily substance on the exterior of the treadmill. This is normal. If there is an oily substance on the treadmill, wipe it off with a soft cloth and a mild, non-abrasive cleaner.
- Left parts are marked “L” or “Left” and right parts are marked “R” or “Right.”
- To identify small parts, see page 6.
- Assembly requires the following tools:

  the included hex keys

  one adjustable wrench

  one Phillips screwdriver

  To avoid damaging parts, do not use power tools.

1. **To register your product and activate your warranty in the UK,** go to iconsupport.eu. If you do not have internet access, call Customer Service (see the front cover of this manual).

   To register your product and activate your warranty in Australia, email or post the following information to the email address or postal address on the front cover of this manual.
   - your receipt (make sure to keep a copy)
   - your name, address, and telephone number
   - the model number, serial number, and name of your product (see the front cover of this manual)

1

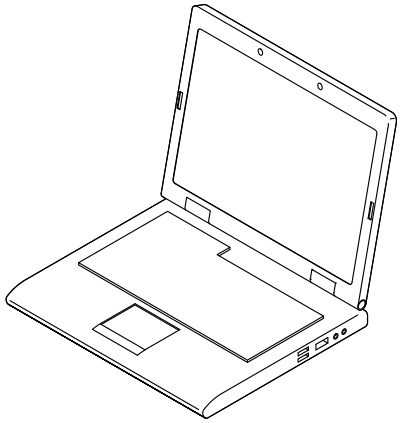

2. **Make sure that the power cord is unplugged.**

   Remove the tie securing the Upright Wire (81) to the front of the Base (94).

   Next, identify the Right Upright (90). Have a second person hold the Right Upright near the Base (94).

   See the inset drawing. Tie the wire tie (A) in the Right Upright (90) securely around the end of the Upright Wire (81). Then, insert the Upright Wire into the lower end of the Right Upright as you pull the other end of the wire tie through the Right Upright.

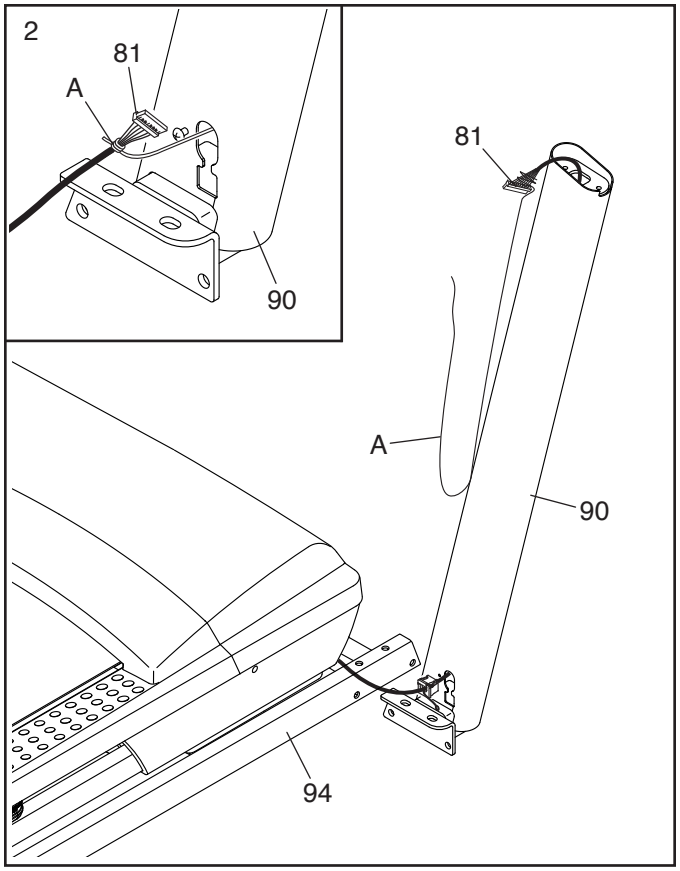

3. Lay the Right Upright (90) near the Base (94). Press the Grommet (77) into the square hole (B) in the Right Upright. **Make sure not to pinch the ground wire (C).**

   Next, remove and discard the indicated screw (D).

   Then, attach the ground wire (C) to the Right Upright (90) with a #8 x 1/2" Silver Screw (8).

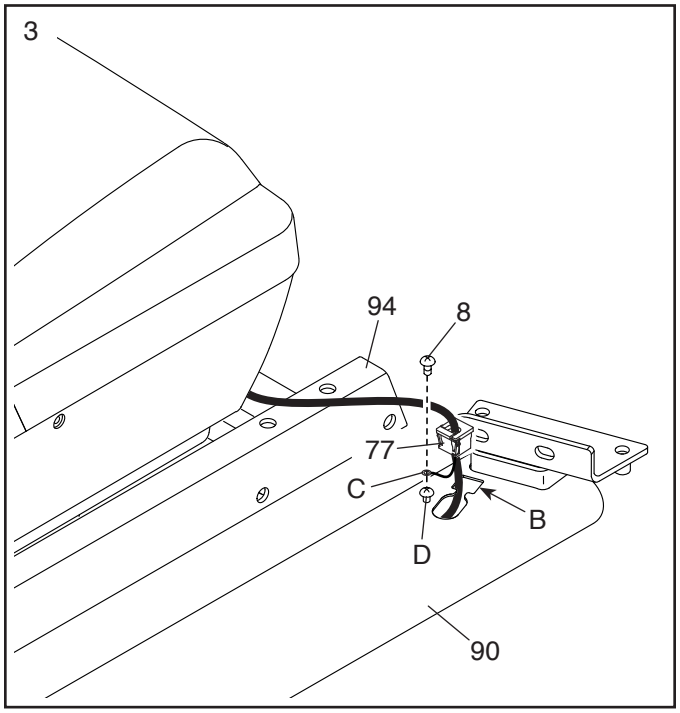

4. Hold the Right Upright (90) against the Base (94). **Make sure not to pinch the Upright Wire (81).**

   Attach the Right Upright (90) and a Wheel (25) with two 3/8" x 2 3/8" Screws (7), a 3/8" x 1 1/4" Screw (63), a 3/8" x 1 3/4" Screw (62), and four 3/8" Star Washers (13) as shown; **do not fully tighten the Screws yet.**

   Attach the Left Upright (not shown) in the same way. Note: There are no wires on the left side.

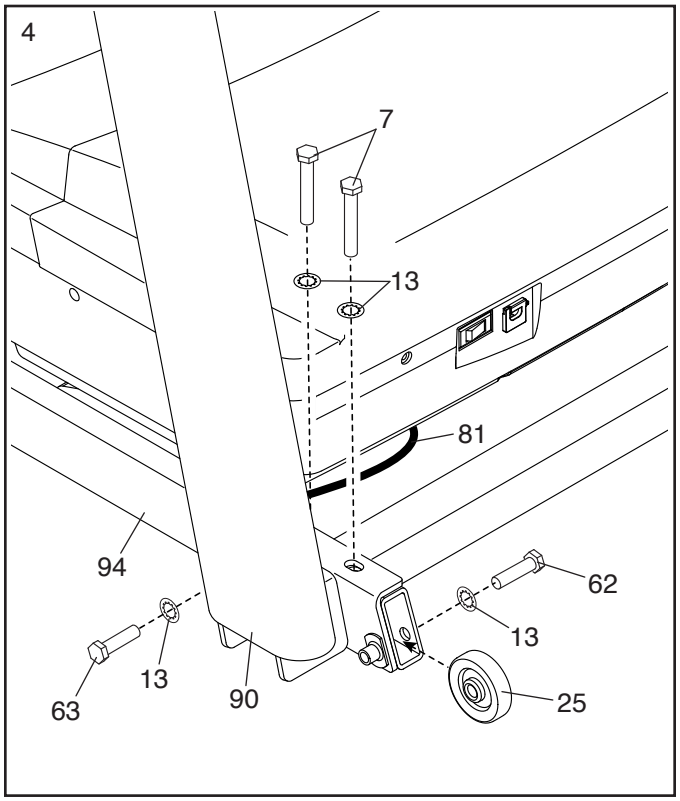

5. Identify the Left and Right Base Covers (82, 83). Slide the Left Base Cover onto the Left Upright (89), and slide the Right Base Cover onto the Right Upright (90). **Do not press the Base Covers into place yet.**

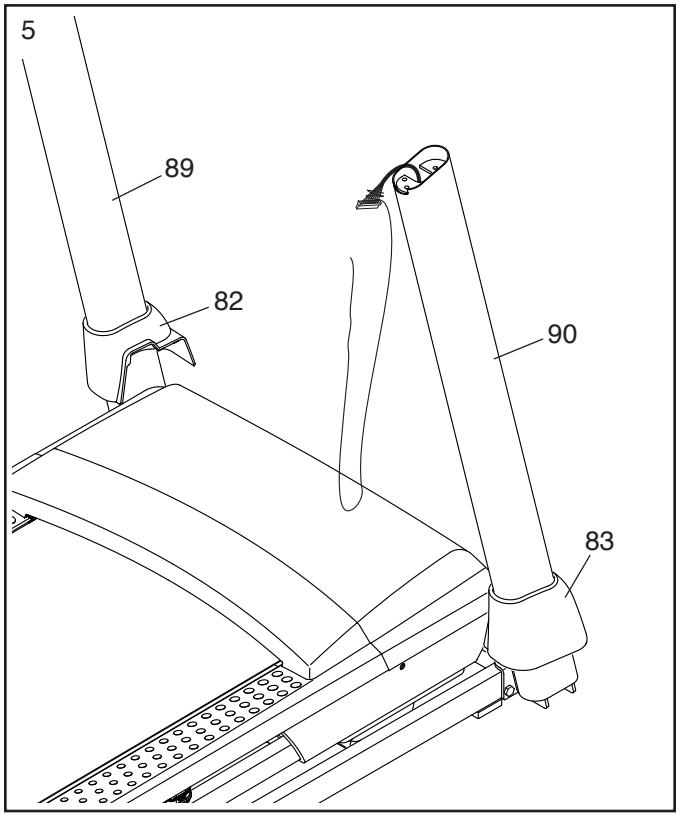

6. Attach a Handrail (86) to the Right Upright (90) with two 5/16" x 2 1/2" Screws (28) and two 5/16" Star Washers (11); **do not fully tighten the Screws yet. Make sure not to pinch the Upright Wire (81), and make sure that the wire is on the indicated side of the Upright.**

   Attach the other Handrail (86) to the Left Upright (89) in the same way. Note: There are no wires on the left side.

   Then, remove and discard the indicated screws (E).

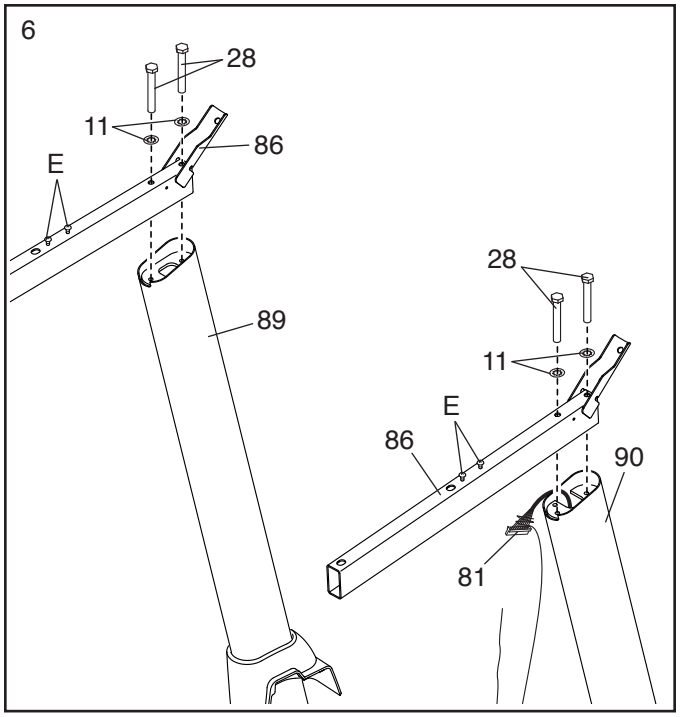

7. **IMPORTANT: To avoid damaging the Pulse Crossbar (93), do not use power tools and do not overtighten the #10 x 3/4" Screws (9).**

   Orient the Pulse Crossbar (93) as shown. Attach the Pulse Crossbar to the Handrails (86) with four #10 x 3/4" Screws (9) and four #10 Star Washers (5); **start all four Screws, and then tighten them.**

   Next, firmly tighten the four 5/16" x 2 1/2" Screws (28).

   Then, remove the wire tie (A) from the Upright Wire (81).

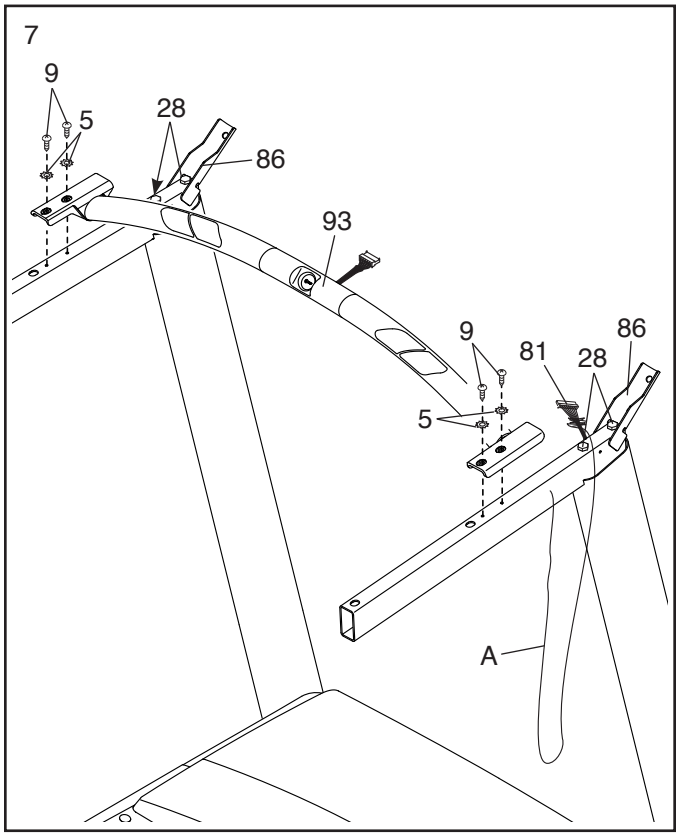

8. Set the console assembly (F) face down on a soft surface to avoid scratching the console assembly. **Remove and save the four 1/4" x 1/2" Screws (12).**

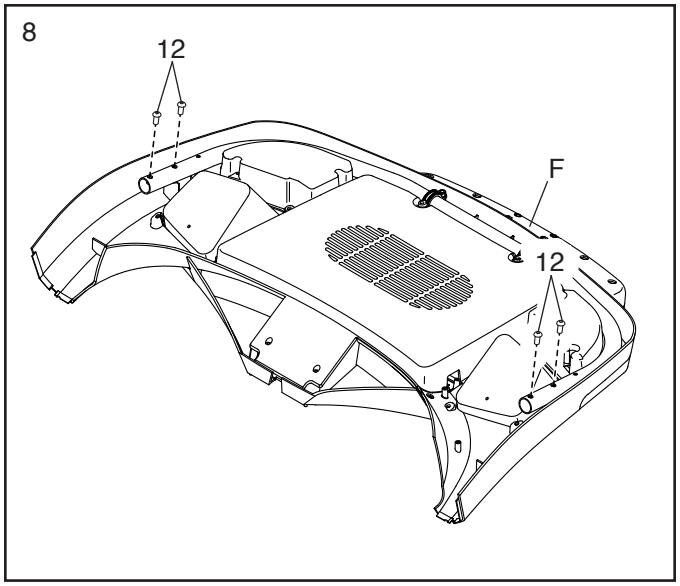

9. Hold the console assembly (F) near the Pulse Crossbar (93).

   See the inset drawing. Connect the pulse wires (G, H). **The connectors should slide together easily and snap into place.** If they do not, turn one connector and try again. **IF YOU DO NOT CONNECT THE CONNECTORS PROPERLY, THE CONSOLE MAY BECOME DAMAGED WHEN YOU TURN ON THE POWER.**

   Next, set the console assembly (F) on the brackets on the Handrails (86); **do not pinch any wires. Insert the wires (G, H) into the console assembly.**

   Attach the console assembly (F) with the four 1/4" x 1/2" Screws (12) that you removed in step 8 and four 1/4" Star Washers (18).

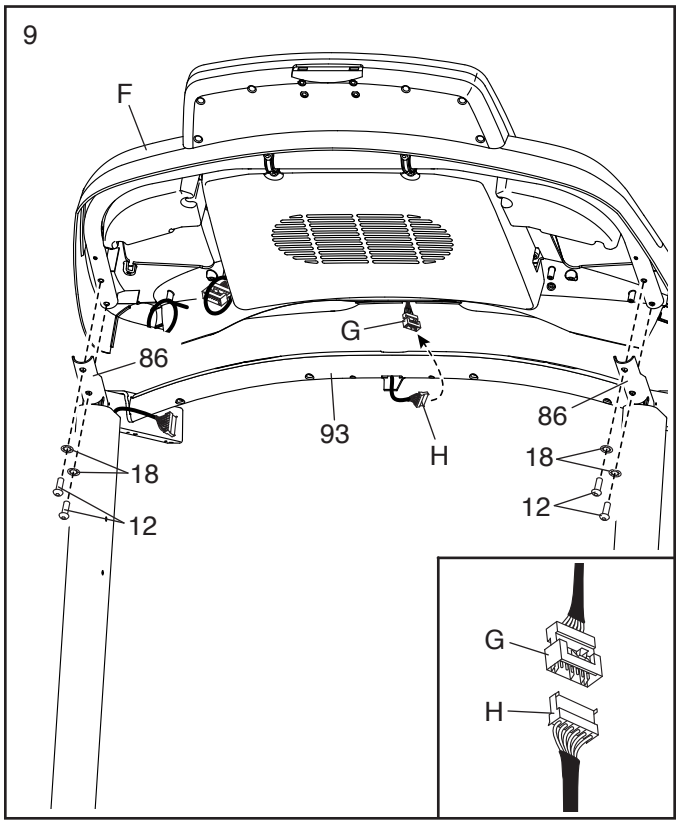

10. Insert the Upright Wire (81) through one looped tie (I) and insert the console wire (J) through the other tie on the console assembly (F).

    Connect the Upright Wire (81) to the console wire (J). **The connectors should slide together easily and snap into place.** If they do not, turn one connector and try again. **IF YOU DO NOT CONNECT THE CONNECTORS PROPERLY, THE CONSOLE MAY BECOME DAMAGED WHEN YOU TURN ON THE POWER.**

    Pull the ties (I) tight around the Upright Wire (81) and the console wire (J) and cut off the end of the tie.

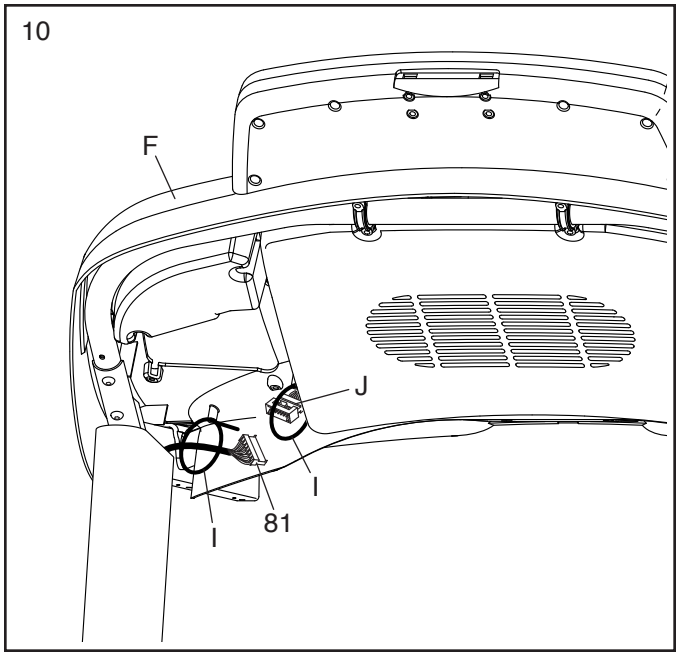

11. Tighten two #8 x 1" Screws (31) into the console assembly (F).

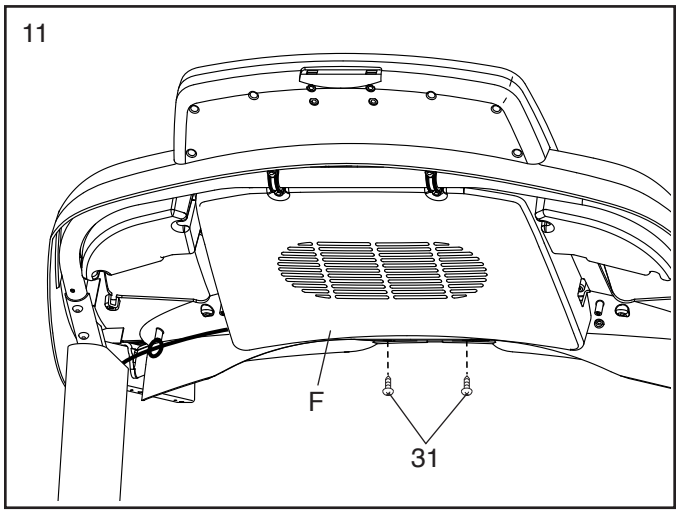

12. Identify the Right and Left Trays (27, 36).

    Attach the Trays (27, 36) to the Console Base (64) with eight #8 x 1/2" Screws (1); **do not overtighten the Screws.**

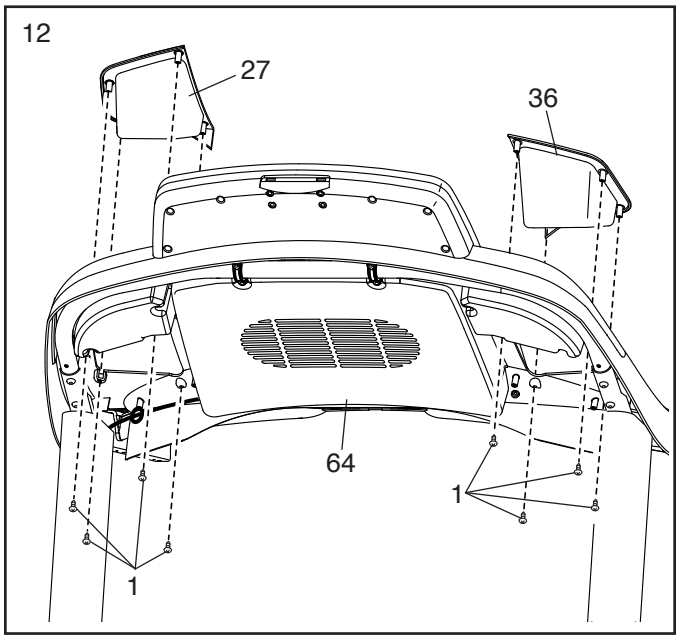

13. Identify the Right Handrail Cover (85). Set the Right Handrail Cover on the right Handrail (86). Start two #8 x 3/4" Truss Head Screws (14) into the bottom of the Right Handrail Cover; **do not fully tighten the Truss Head Screws.**

    Next, slide the Right Handrail Cover (85) forward until it rests against the console assembly (F). Then, tighten the two #8 x 3/4" Truss Head Screws (14); **do not overtighten the Truss Head Screws.**

    Then, attach the Right Bottom Handrail Cover (88) with two 8 x 3/4" Truss Head Screws (14).

    Attach the Left Handrail Cover (79) and the Left Bottom Handrail Cover (87) in the same way.

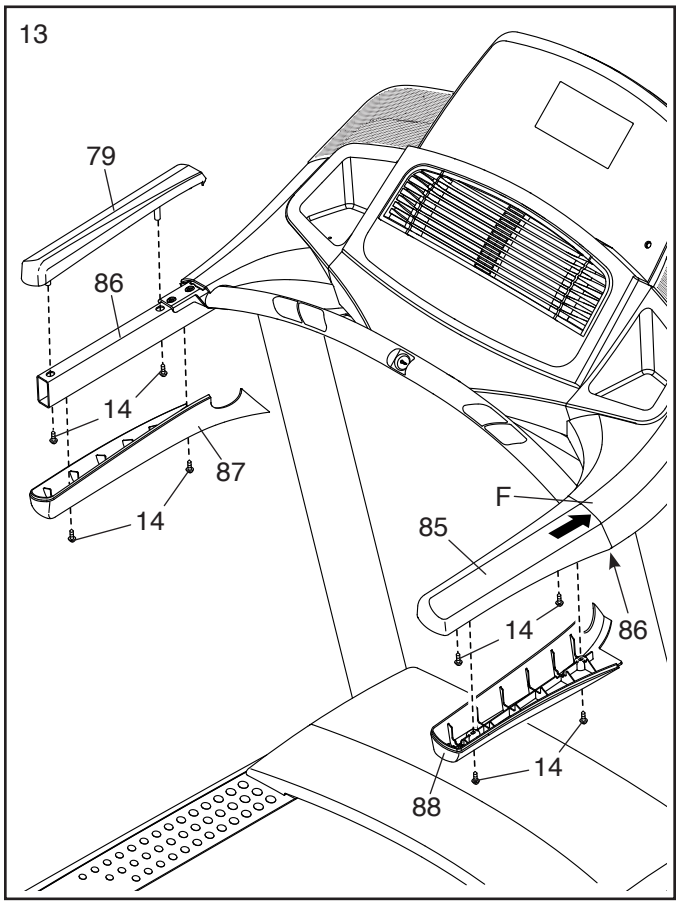

14. **Note: If the treadmill is assembled on a smooth surface, it may roll forward during this step.**

    Raise the Frame (56) to the upright position. **IMPORTANT: Do not raise the Frame past the vertical position. Have a second person hold the Frame until step 16 is completed.**

    Remove the two 5/16" x 3/4" Screws (4) from the Latch Crossbar (41).

    Orient the Latch Crossbar (41) as shown. **Make sure that the "This side toward belt" sticker (K) is facing the treadmill.** Attach the Latch Crossbar to the brackets (L) on the Frame (56) with the two 5/16" x 3/4" Screws (4) and two 5/16" Star Washers (11).

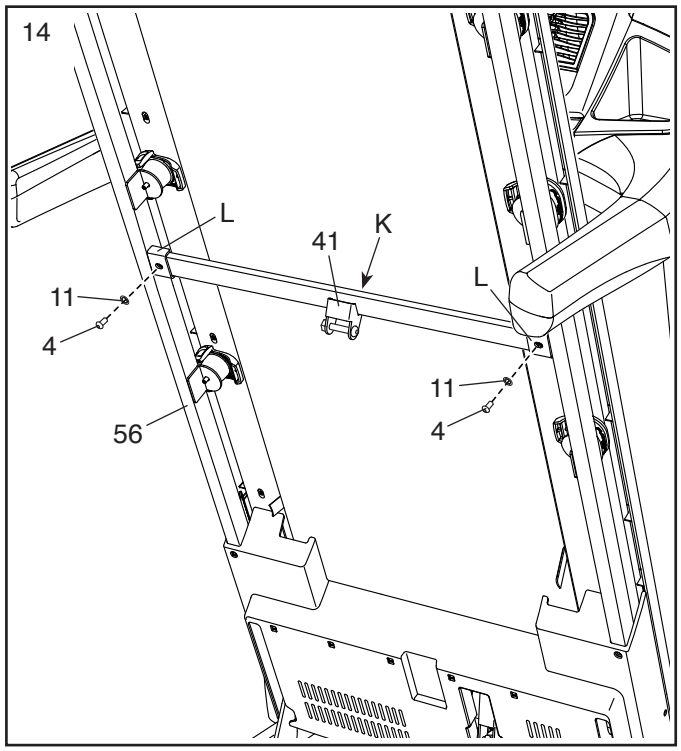

15. Remove the 5/16" Nut (34) and the 5/16" x 1 3/4" Bolt (6) from the bracket on the Base (94).

Next, orient the Storage Latch (53) as shown.

Attach the lower end of the Storage Latch (53) to the bracket on the Base (94) with the 5/16" x 1 3/4" Bolt (6) and the 5/16" Nut (34).

Then, raise the Storage Latch (53) to a vertical position, and remove the tie (M).

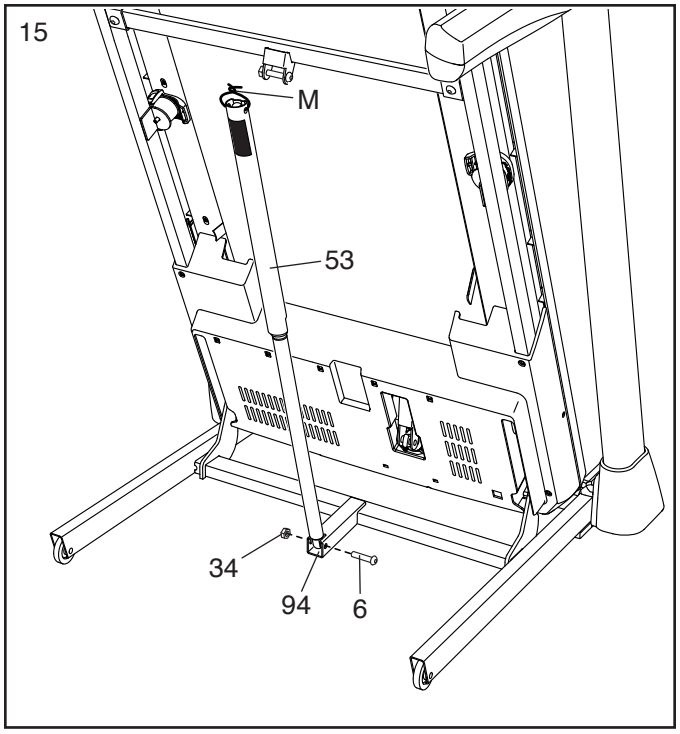

16. Remove the 5/16" Nut (34) and the 5/16" x 2 1/4" Bolt (3) from the bracket on the Latch Crossbar (41).

Align the upper end of the Storage Latch (53) with the bracket on the Latch Crossbar (41), and insert the 5/16" x 2 1/4" Bolt (3) through the bracket and the Storage Latch. **This will push a spacer (N) out of the Storage Latch; discard the spacer.**

Next, tighten the 5/16" Nut (34) onto the 5/16" x 2 1/4" Bolt (3). **Do not overtighten the Nut; the Storage Latch (53) must be able to pivot.**

Then, lower the Frame (56) (see HOW TO LOWER THE TREADMILL FOR USE on page 32).

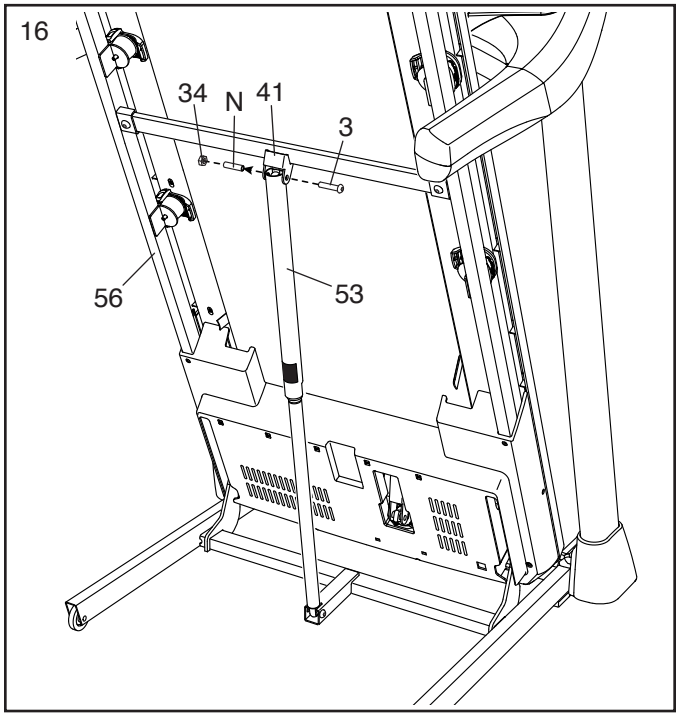

17. **Firmly tighten the four 3/8" x 2 3/8" Screws (7) and the two 3/8" x 1 1/4" Screws (63).**

    Next, tighten the two 3/8" x 1 3/4" Screws (62); the Wheels (25) must turn freely.

    Set the Left Inner Base Cover (99) onto the lower end of the Left Upright (89). Then, slide the Left Base Cover (82) downward and press it onto the Left Inner Base Cover.

    Next, set the Right Inner Base Cover (100) onto the lower end of the Right Upright (90). Then, slide the Right Base Cover (83) downward and press it onto the Right Inner Base Cover.

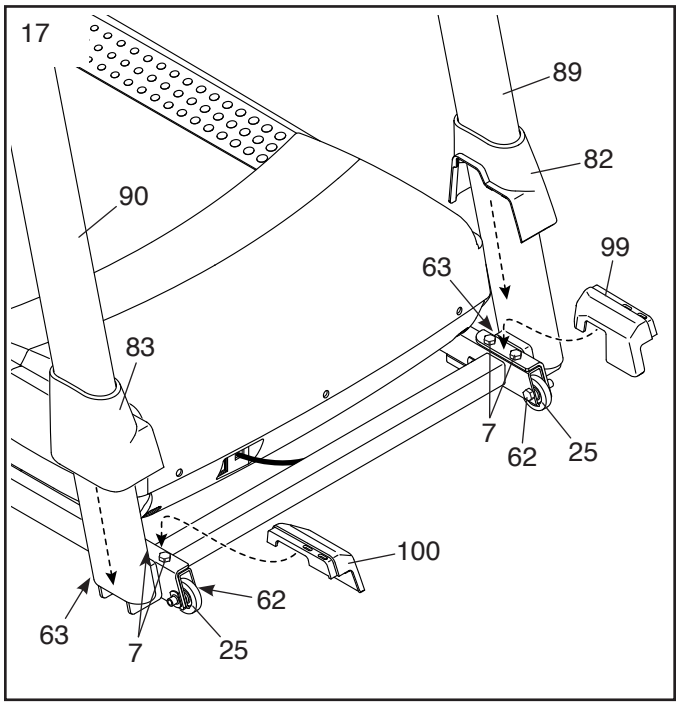

18. Press the two tabs (not shown) on the Tablet Holder (98) into the slots (O) in the console assembly (F).

    Attach the Tablet Holder (98) with four #8 x 5/8" Machine Screws (38). **Tip: Start the two upper Machine Screws first, and then start the two lower Machine Screws. Do not overtighten the Machine Screws.**

    IMPORTANT: The Tablet Holder (98) is designed for use with most full-size tablets. Do not place any other electronic device or object in the Tablet Holder.

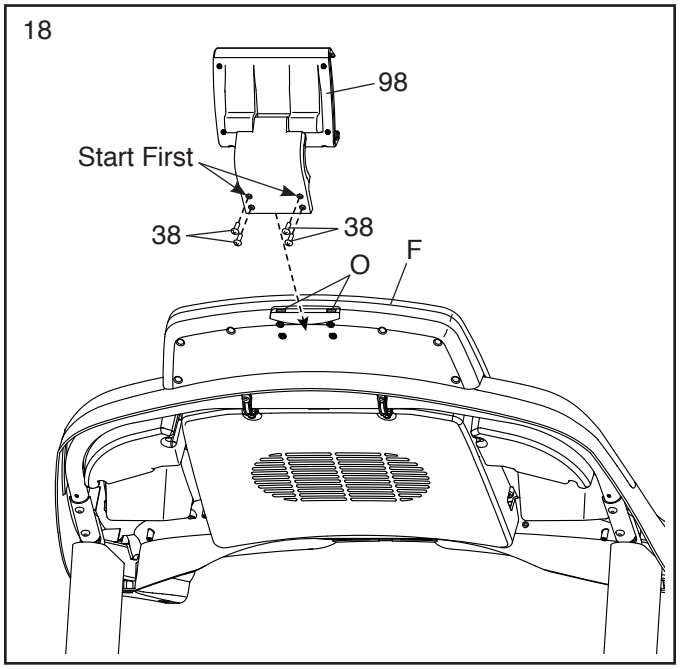

19. **Make sure that all parts are properly tightened before you use the treadmill.** If there are sheets of plastic on the treadmill decals, remove the plastic. To protect the floor or carpet, place a mat under the treadmill. To avoid damage to the console, keep the treadmill out of direct sunlight. Keep the included hex key in a secure place; the hex key is used to adjust the walking belt (see pages 34 and 35). Note: Extra hardware may be included.

HOW TO USE THE TREADMILL

HOW TO PLUG IN THE POWER CORD

This product must be earthed. If it should malfunction or break down, earthing provides a path of least resistance for electric current to reduce the risk of electric shock. This product's power cord has an equipment-earthing conductor and an earthing plug. **IMPORTANT: If the power cord is damaged, it must be replaced with a manufacturer-recommended power cord.**

⚠ DANGER: Improper connection of the equipment-earthing conductor can result in an increased risk of electric shock. Check with a qualified electrician or serviceman if you are in doubt as to whether the product is properly earthed. Do not modify the plug provided with the product—if it will not fit the outlet, have a proper outlet installed by a qualified electrician.

Follow the steps below to plug in the power cord.

1. Plug the indicated end of the power cord into the socket on the treadmill.

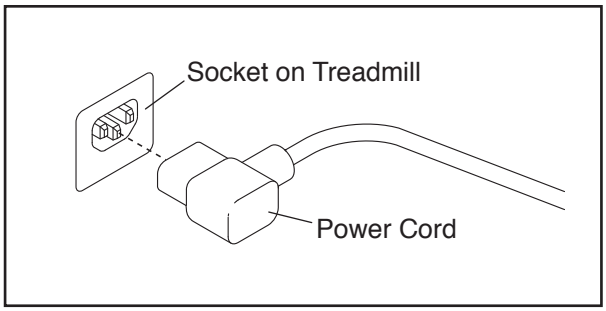

2. Plug the power cord into an appropriate outlet that is properly installed and earthed in accordance with all local codes and ordinances.

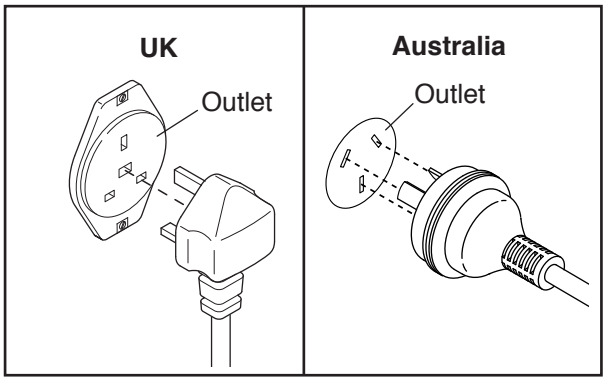

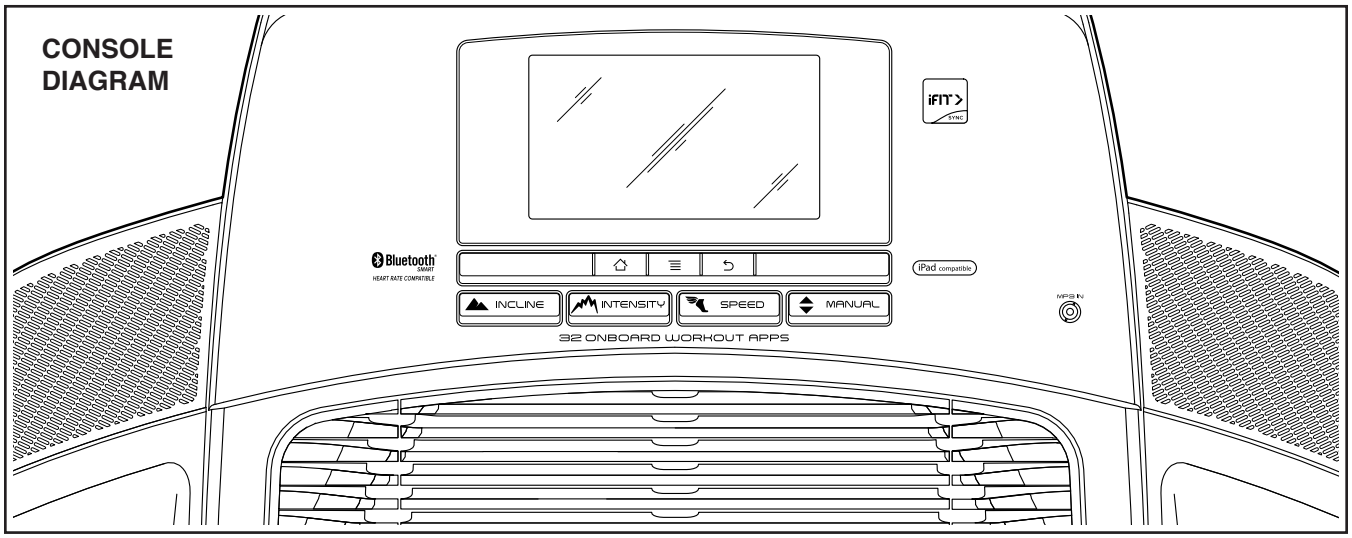

MAKE YOUR FITNESS GOALS A REALITY WITH IFIT.COM

With your new iFit-enabled fitness equipment, you can use an array of features on iFit.com to make your fitness goals a reality:

Run anywhere in the world with customizable Google Maps.

Download training workouts designed to help you reach your personal goals.

Measure your progress by competing against other users in the iFit community.

Upload your workout results to the iFit cloud and track your accomplishments.

Set calorie, time, or distance goals for your workouts.

Watch high-definition videos with simulated workouts.

Choose and download sets of weight-loss workouts.

Go to iFit.com to learn more.

FEATURES OF THE CONSOLE

The advanced treadmill console offers a selection of features designed to make your workouts more effective and enjoyable.

When you use the manual mode, you can change the speed and incline of the treadmill with the touch of a button. As you exercise, the console will display instant exercise feedback. You can also measure your heart rate using the handgrip heart rate monitor or a compatible chest heart rate monitor. **See page 28 for information about the optional chest heart rate monitor.**

In addition, the console features a selection of onboard workouts. Each workout automatically controls the speed and incline of the treadmill as it guides you through an effective exercise session. In addition, you can set a calorie, time, distance, or pace goal.

You can even browse the internet or listen to your favorite workout music or audio books with the console's sound system while you exercise.

To turn on the power, see page 18. **To learn how to use the touch screen,** see page 18. **To set up the console,** see page 19.

HOW TO TURN ON THE POWER

IMPORTANT: If the treadmill has been exposed to cold temperatures, allow it to warm to room temperature before you turn on the power. If you do not do this, you may damage the console displays or other electrical components.

Plug in the power cord (see page 16). Next, locate the power switch on the treadmill frame near the power cord. Press the power switch into the reset position.

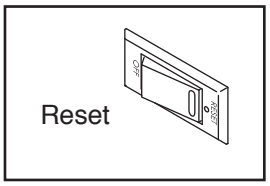

IMPORTANT: The console features a display demo mode, designed to be used if the treadmill is displayed in a store. If the demo mode is turned on, the screen will show a demo presentation after you plug in the power cord and press the power switch into the reset position, before you insert the key. To turn off the demo mode, see step 7 on page 26.

Next, stand on the foot rails of the treadmill. Locate the clip attached to the key, and slide the clip securely onto the waistband of your clothes. Then, insert the key into the console. **Note: It may take a minute for the console to be ready for use. IMPORTANT: In an emergency, the key can be pulled from the console, causing the walking belt to slow to a stop. Test the clip by carefully taking a few steps backward; if the key is not pulled from the console, adjust the position of the clip.**

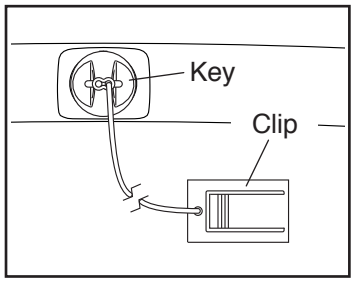

Note: The console can display speed and distance in either miles or kilometers. To find which unit of measurement is selected, see step 4 on page 26. For simplicity, all instructions in this section refer to kilometers.

HOW TO USE THE TOUCH SCREEN

The console features a tablet with a full-color touch screen. The following information will help you become familiar with the tablet's advanced technology:

- The console functions similarly to other tablets. You can slide or flick your finger against the screen to move certain images on the screen, such as the displays in a workout (see step 5 on page 20). However, you cannot zoom in and out by sliding your fingers on the screen.
- The screen is not pressure sensitive. You do not need to press hard on the screen.
- To type information into a text box, touch the text box to view the keyboard. To use numbers or other characters on the keyboard, touch the ?123 button. To view more characters, touch the Alt button. Touch the Alt button again to return to the number keyboard. To return to the letter keyboard, touch the ABC button. To use a capital character, touch the button with an upward-facing arrow. To use multiple capital characters, touch the arrow button again. To return to the lowercase keyboard, touch the arrow button a third time. To clear the last character, touch the button with a backward-facing arrow and an X.

  Use the buttons on the console to navigate the tablet. Press the home button to return to the main menu. Press the settings button to access the settings main menu (see page 26). Press the back button to return to the previous screen.

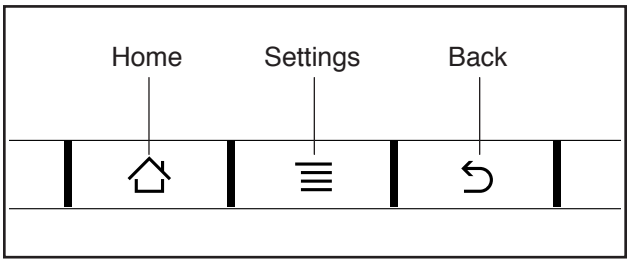

HOW TO SET UP THE CONSOLE

Before using the treadmill for the first time, set up the console.

1. **Connect to your wireless network.**

   Note: In order to access the internet, download iFit workouts, and use several other features of the console, you must be connected to a wireless network. See HOW TO USE THE WIRELESS NETWORK MODE on page 30 to connect the console to your wireless network.

2. **Check for firmware updates.**

   First, see step 1 on page 26 and step 2 on page 26 and select the maintenance mode. Then, see step 3 on page 29 and check for firmware updates.

3. **Calibrate the incline system.**

   See step 4 on page 29 and calibrate the incline system of the treadmill.

4. **Create an iFit account.**

   Touch the globe button near the lower-left corner of the screen and touch the iFit button.

   The browser will open to the iFit.com home page. Follow the prompts on the website to sign up for your iFit membership. Note: For information about navigating in the browser, see page 28.

The console is now ready for you to begin working out. The following pages explain the various workouts and other features that the console offers.

To use the manual mode, see this page. **To use an onboard workout,** see page 22. **To use a set-a-goal workout,** see page 24. **To use an iFit workout,** see page 25.

To use the equipment settings mode, see page 26. **To use the sound system,** see page 27. **To use the internet browser,** see page 28. **To use the maintenance mode,** see page 29. **To use the wireless network mode,** see page 30.

IMPORTANT: If there are sheets of plastic on the console, remove the plastic. To prevent damage to the walking platform, wear clean athletic shoes while using the treadmill. The first time you use the treadmill, observe the alignment of the walking belt, and center the walking belt if necessary (see page 35).

HOW TO USE THE MANUAL MODE

1. **Insert the key into the console.**

   See HOW TO TURN ON THE POWER on page 18. **Note: It may take a minute for the console to be ready for use.**

2. **Select the main menu.**

   When you turn on the power, the main menu will appear after the console boots up. Touch the home button in the lower-left corner of the screen to return to the main menu at any time.

3. **Start the walking belt and adjust the speed.**

   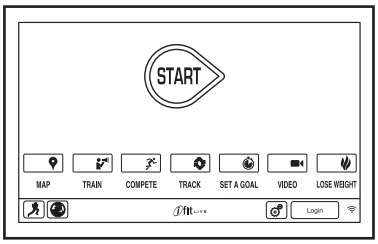

   Touch the Start button on the screen or press the Start button on the console to start the walking belt. You can also press the Manual Control button on the console, and then touch the Resume button on the screen. The walking belt will begin to move at 2 Km/H. As you exercise, change the speed of the walking belt as desired by pressing the Speed increase and decrease buttons. Each time you press one of the buttons, the speed setting will change in small increments; if you hold down the button, the speed setting will change more quickly.

   If you press one of the Quick Speed buttons, the walking belt will gradually change speed until it reaches the selected speed setting.

   To stop the walking belt, press the Stop button. To restart the walking belt, press the Start button.

4. **Change the incline of the treadmill as desired.**

   To change the incline of the treadmill, press the Incline increase and decrease buttons or one of the Quick Incline buttons. Each time you press one of the buttons, the incline will gradually change until it reaches the selected incline setting.

   Note: The first time you adjust the incline, you must first calibrate the incline system (see step 4 on page 29).

5. **Monitor your progress with the displays.**

   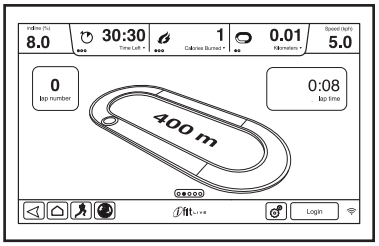

   The console offers several display modes. The display mode that you select will determine which workout information is shown. To select the desired display mode, simply flick or slide the screen. You can also view additional information by touching the red boxes on the screen.

   As you walk or run on the treadmill, the screen can show the following workout information:

   - The incline level of the treadmill
   - The elapsed time
   - The time left (the manual mode does not have a time left countdown)
   - The approximate number of calories you have burned
   - The approximate number of calories you are burning per hour

- The distance that you have walked or run
- The number of vertical meters (VM) you have climbed
- The speed of the walking belt
- A track representing 1/4 mile (400 m)
- Your pace
- Your current lap number
- Your heart rate (see step 6)

If desired, adjust the volume by pressing the volume buttons on the console.

To pause the workout, touch one of the menu buttons on the screen or press the Stop button on the console. To continue the workout, touch the Resume button or the Start button. To end the workout session, touch the End Workout button.

6. **Measure your heart rate if desired.**

Note: If you use the handgrip heart rate monitor and a chest heart rate monitor at the same time, the console will not display your heart rate accurately. For information about the optional chest heart rate monitor, see page 28. Note: The console is compatible with BLUETOOTH® Smart heart rate monitors.

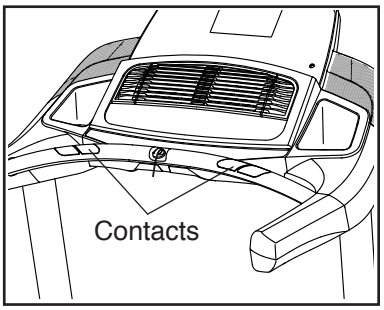

Before using the handgrip heart rate monitor, remove the sheets of plastic from the metal contacts. In addition, make sure that your hands are clean.

To measure your heart rate, **stand on the foot rails** and hold the contacts with your palms for approximately ten seconds; **avoid moving your hands.** When your pulse is detected, your heart rate will be shown. **For the most accurate heart rate reading, continue to hold the contacts for about 15 seconds.**

7. **Turn on the fan if desired.**

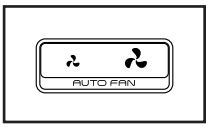

The fan features several speed settings. Press the fan buttons repeatedly to select a fan speed or to turn on or turn off the fan.

8. **When you are finished exercising, remove the key from the console.**

   Step onto the walking platform and touch the home button or the back button on the screen or press the Stop button on the console. A workout summary will appear on the screen. After you view the workout summary, touch the Finish button to return to the main menu. You may also be able to either save or publish your results using one of the options on the screen. Then, remove the key from the console and put it in a secure place.

   When you are finished using the treadmill, press the power switch into the off position and unplug the power cord. **IMPORTANT: If you do not do this, the treadmill's electrical components may wear prematurely.**

HOW TO USE AN ONBOARD WORKOUT

1. **Insert the key into the console.**

   See HOW TO TURN ON THE POWER on page 18.

2. **Select an onboard workout.**

   To select an onboard workout, press the Incline button, the Intensity button, or the Speed button on the console. Note: You can also touch the runner button on the screen to select the workouts menu.

   Then, select the desired workout. The screen will show the name, duration, and distance of the workout. The screen will also show the approximate number of calories you will burn during the workout and a profile of the speed and/or incline settings of the workout.

3. **Start the workout.**

   Touch the Start Workout button to start the workout. A moment after you touch the button, the walking belt will begin to move. Hold the handrails and begin walking.

   Each workout is divided into several segments. One speed setting and one incline setting are programmed for each segment. Note: The same speed setting and/or incline setting may be programmed for consecutive segments.

   During the workout, the profile will show your progress. To view the profile, flick or slide the screen. The vertical colored line will indicate the current segment of the workout. The bottom profile represents the incline setting of the current segment. The top profile represents the speed setting of the current segment.

   At the end of the first segment of the workout, the treadmill will automatically adjust to the speed and/or incline settings for the next segment.

The workout will continue in this way until the last segment ends. The walking belt will then slow to a stop and a workout summary will appear on the screen. After you view the workout summary, touch the Finish button to return to the main menu. You may also be able to either save or publish your results using one of the options on the screen.

If the speed and/or incline settings are too high or too low at any time during the workout, you can override the settings by pressing the Speed or Incline buttons. **If you press a Speed button,** you can then manually control the speed (see step 3 on page 20). **If you press an Incline button,** you can then manually control the incline (see step 4 on page 20). **To return to the programmed speed and/or incline settings of the workout,** touch the Follow Workout button.

To pause the workout, touch either the back button or the home button in the lower-left corner of the screen, or press the Stop button on the console. To continue the workout, touch the Resume button or press the Start button on the console. To end the workout, touch the End Workout button.

Note: The calorie goal is an estimate of the number of calories that you will burn during the workout. The actual number of calories that you burn will depend on various factors such as your weight. In addition, if you manually change the speed or incline of the treadmill during the workout, the number of calories you burn will be affected.

4. **Monitor your progress with the displays.**

   See step 5 on page 20. The screen can also show a profile of the speed and incline settings of the workout.

5. **Measure your heart rate if desired.**

   See step 6 on page 21.

6. **Turn on the fan if desired.**

   See step 7 on page 21.

7. **When you are finished exercising, remove the key from the console.**

   See step 8 on page 22.

HOW TO USE A SET-A-GOAL WORKOUT

1. **Insert the key into the console.**

   See HOW TO TURN ON THE POWER on page 18.

2. **Select the main menu.**

   See step 2 on page 20.

3. **Select a set-a-goal workout.**

   To select a set-a-goal workout, touch the Set A Goal button on the screen.

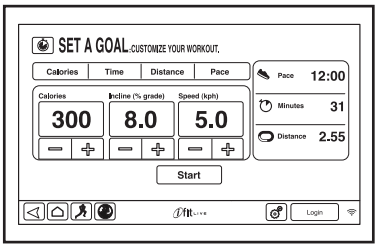

   To select a calorie, time, distance, or pace goal, touch the Calories, Time, Distance, or Pace button. Then, touch the increase and decrease buttons on the screen to set a calorie, time, distance, or pace goal and to set the speed and incline for the workout. The screen will show the duration and distance of the workout, and the approximate number of calories you will burn during the workout.

4. **Start the workout.**

   Touch the Start button to start the workout. A moment after you touch the button, the walking belt will begin to move. Hold the handrails and begin walking.

   The workout will function in the same way as the manual mode (see pages 19 to 22).

   The workout will continue until you reach the goal that you set. The walking belt will then slow to a stop, and a workout summary will appear on the screen. After you view the workout summary, touch the Finish button to return to the main menu. You may also be able to either save or publish your results using one of the options on the screen.

   Note: The calorie goal is an estimate of the number of calories that you will burn during the workout. The actual number of calories that you burn will depend on various factors such as your weight.

5. **Monitor your progress with the displays.**

   See step 5 on page 20.

6. **Measure your heart rate if desired.**

   See step 6 on page 21.

7. **Turn on the fan if desired.**

   See step 7 on page 21.

8. **When you are finished exercising, remove the key from the console.**

   See step 8 on page 22.

HOW TO USE AN IFIT WORKOUT

Note: To use an iFit workout, you must have access to a wireless network (see HOW TO USE THE WIRELESS NETWORK MODE on page 30). An iFit account is also required.

1. **Insert the key into the console.**

   See HOW TO TURN ON THE POWER on page 18.

2. **Select the main menu.**

   See step 2 on page 19.

3. **Log in to your iFit account.**

   If you have not already done so, touch the Login button to log in to your iFit account. The screen will ask for your iFit.com username and password. Enter them and touch the Login button. Touch the Cancel button to exit the login screen. Note: Usernames and passwords are case-sensitive.

   To switch users within your iFit account, touch the user button at the bottom of the screen. If more than one user is associated with the account, a list of users will appear. Touch the name of the desired user.

4. **Select an iFit workout.**

   To download an iFit workout in your schedule, touch the Map, Train, Video, or Lose Wt. button to download the next workout of that type in your schedule. Note: You may be able to access demo workouts through these options, even if you do not log in to an iFit account.

   To compete in a race that you have previously scheduled, touch the Compete button. To view your Workout History, touch the Track button. To use a set-a-goal workout, touch the Set A Goal button (see page 24).

   Before some workouts will download, you must add them to your schedule on iFit.com.

   For more information about the iFit workouts, please see iFit.com.

   When you select an iFit workout, the screen will show the name, the estimated duration, and the distance of the workout. The screen will also show the approximate number of calories you will burn during the workout. If you select a competition workout, the display will count down to the beginning of the race.

5. **Start the workout.**

   See step 3 on page 22.

   An audio coach may guide you through some workouts (see HOW TO USE THE SOUND SYSTEM on page 27).

6. **Monitor your progress with the displays.**

   See step 5 on page 20. The screen may also show a map of the trail you are walking or running. Touch the buttons on the screen to select the desired map options.

   During a competition workout, the screen will show the speeds of the racers and the distances they have traveled. The screen will also show the numbers of seconds that the other racers are ahead of you or behind you.

7. **Measure your heart rate if desired.**

   See step 6 on page 21.

8. **Turn on the fan if desired.**

   See step 7 on page 21.

9. **When you are finished exercising, remove the key from the console.**

   See step 8 on page 22.

For more information about iFit, go to iFit.com.

HOW TO USE THE EQUIPMENT SETTINGS MODE

1. Select the settings main menu.

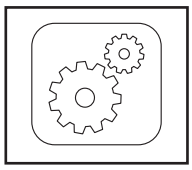

Insert the key into the console (see HOW TO TURN ON THE POWER on page 18). Next, select the main menu (see step 2 on page 20). Then, touch the gears button near the lower-right corner of the screen to select the settings main menu.

2. Select the equipment settings mode.

In the settings main menu, touch the Equipment Settings button. Note: Slide or flick the screen to scroll up or down through the options if necessary.

3. Select a language.

To select a language, touch the Language button and select the desired language. Then, touch the back button on the screen to return to the equipment settings mode. Note: This feature may not be enabled.

4. Select the unit of measurement.

Touch the US/Metric button to view the selected unit of measurement. Change the unit of measurement, if desired. Then, touch the back button on the screen.

5. Select a timezone.

Touch the Timezone button. Select your local timezone to have the console sync to your local time. Then, touch the back button on the screen.

6. Select an update time.

To select a time for automatic console updates, touch the Update Time button and select the desired time. Then, touch the back button on the screen.

IMPORTANT: You must still unplug the power cord after using the treadmill. Set the update time for a time when you normally use the treadmill and will be available to unplug the power cord after an update.

7. Turn on or turn off the display demo mode.

The console features a display demo mode, designed to be used if the treadmill is displayed in a store. While the demo mode is turned on, the console will function normally when you plug in the power cord, press the power switch into the reset position, and insert the key into the console. However, when you remove the key, the screen will show a demo presentation.

To turn on or turn off the display demo mode, first touch the Demo Mode button. Next, touch the On checkbox or the Off checkbox. Then, touch the back button on the screen.

8. Enable or disable the internet browser.

To enable or disable the internet browser, first touch the Browser button. Next, touch the Enable checkbox or the Disable checkbox. Then, touch the back button on the screen.

9. Enable or disable the street view.

During some workouts, the screen may show a map. To enable or disable the street view feature of the maps, first touch the Street View button. Next, touch the Enable checkbox or the Disable checkbox. Then, touch the back button on the screen.

10. Enable or disable the key.

Note: This feature may not be enabled on your treadmill.

You can disable the key so that the treadmill does not require the use of the key, if desired. Touch the Safety Key button. To disable the key, touch the Disable checkbox. **CAUTION: Read the safety warning on the screen before disabling the key.** To enable the key again, touch the Enable checkbox.

11. Enable or disable a passcode.

The console features a child-safety passcode, designed to prevent unauthorized users from using the treadmill.

Touch the Passcode button. To enable a passcode, touch the Enable checkbox. Then, enter a 4-digit passcode of your choice. Touch Save to use this passcode. Touch Cancel to return to the equipment settings mode and not use a passcode. To disable the passcode, touch the Disable checkbox.

Note: If a passcode is enabled, the console will regularly ask for you to enter the passcode. The console will remain locked until the correct passcode is entered. **IMPORTANT: If you forget your passcode, enter the following master passcode to unlock the console: 1985.**

12. Set a safety screen timeout.

The console features an automatic screen reset; if no buttons are touched or pressed and the walking belt does not move for a set amount of time, the console will automatically reset.

To set the amount of time the console will wait before it automatically resets, touch the Safety Screen Timeout button to view a list of times. Then, select the amount of time desired. Touch the back button on the screen.

13. Exit the equipment settings mode.

To exit the equipment settings mode, touch the back button on the screen.

HOW TO USE THE SOUND SYSTEM

To play music or audio books through the console sound system while you exercise, plug a 3.5 mm male to 3.5 mm male audio cable (not included) into the jack on the console and into a jack on your personal audio player; **make sure that the audio cable is fully plugged in. Note: To purchase an audio cable, see your local electronics store.**

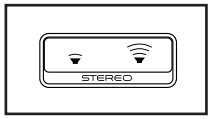

Next, press the play button on your personal audio player. Adjust the volume level using the volume increase and decrease buttons on the console or the volume control on your personal audio player.

THE OPTIONAL CHEST HEART RATE MONITOR

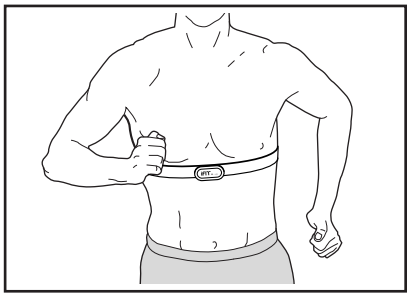

Whether your goal is to burn fat or to strengthen your cardiovascular system, the key to achieving the best results is to maintain the proper heart rate during your workouts. The optional chest heart rate monitor will enable you to continuously monitor your heart rate while you exercise, helping you to reach your personal fitness goals. **To purchase a chest heart rate monitor, please see the front cover of this manual.**

Note: The console is compatible with all BLUETOOTH Smart heart rate monitors.

HOW TO USE THE INTERNET BROWSER

Note: To use the browser, you must have access to a wireless network including an 802.11b/g/n router with SSID broadcast enabled (hidden networks are not supported).

To open the browser, touch the globe button near the lower-left corner of the screen. Then, select a website.

To navigate the internet browser, touch the Back, Refresh, and Forward buttons on the screen. To exit the internet browser, touch the Return button on the screen.

To use the keyboard, see HOW TO USE THE TOUCH SCREEN on page 18.

To enter a different web address in the URL bar, first, slide your finger down the screen to view the URL bar, if necessary. Then, touch the URL bar, use the keyboard to enter the address, and touch the Go button.

Note: While you are using the browser, the speed, incline, fan, and volume buttons will still function, but the workout buttons will not function.

Note: If you have questions after following these instructions, go to support.iFit.com for assistance.

HOW TO USE THE MAINTENANCE MODE

1. **Select the settings main menu.**

   See step 1 on page 26.

2. **Select the maintenance mode.**

   In the settings main menu, touch the Maintenance button to enter the maintenance mode.

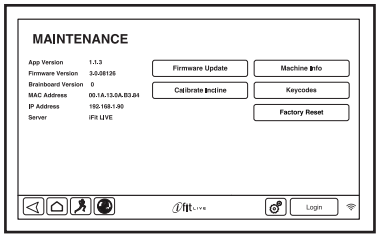

   The maintenance mode main screen will show information about the model and version of the treadmill.

3. **Update the console firmware.**

   For the best results, regularly check for firmware updates.

   Touch the Firmware Update button to check for firmware updates using your wireless network. The update will begin automatically.

   To avoid damaging the treadmill, do not turn off the power or remove the key while the firmware is being updated.

   The screen will show the progress of the update. When the update is complete, the treadmill will turn off and then turn back on. If it does not, press the power switch into the off position. Wait for several seconds, and then press the power switch into the reset position. Note: It may take a few minutes for the console to be ready for use.

   Note: Occasionally, a firmware update may cause your console to function slightly differently. These updates are always designed to improve your exercise experience.

4. **Calibrate the incline system of the treadmill.**

   Touch the Calibrate Incline button. Then, touch the Begin button to calibrate the incline system. The treadmill will automatically rise to the maximum incline level, lower to the minimum incline level, and then return to the starting position. This will calibrate the incline system. Touch the Cancel button to return to the maintenance mode. When the incline system is calibrated, touch the Finish button.

   IMPORTANT: Keep pets, feet, and other objects away from the treadmill while the incline system is calibrating. In an emergency, pull the key from the console to stop the incline calibration.

5. **View machine information.**

   Touch the Machine Info button to view information about your treadmill. After you view the information, touch the back button on the screen.

6. **Find keycodes.**

   The Keycodes button is intended to be used by service technicians to identify whether a certain button is working correctly.

7. **Restore the console to factory settings.**

   To restore the console to factory settings, touch the Factory Reset button on the screen.

8. **Exit the maintenance mode.**

   To exit the maintenance mode, touch the back button on the screen.

HOW TO USE THE WIRELESS NETWORK MODE

The console features a wireless network mode that allows you to set up a wireless network connection.

1. **Select the settings main menu.**

   See step 1 on page 26.

2. **Select the wireless network mode.**

   In the settings main menu, touch the Wireless Network button to enter the wireless network mode.

3. **Enable Wi-Fi.**

   Make sure that the Wi-Fi checkbox is marked with a green checkmark. If it is not, touch the Wi-Fi menu option once and wait for a few seconds. The console will search for available wireless networks.

4. **Set up and manage a wireless network connection.**

   When Wi-Fi is enabled, the screen will show a list of available networks. Note: It may take several seconds for the list of wireless networks to appear.

   Make sure that the checkbox on the Network notification menu option is marked with a green checkmark to have the console notify you when a wireless network is within range and available.

   Note: You must have your own wireless network and an 802.11b/g/n router with SSID broadcast enabled (hidden networks are not supported).

   When a list of networks appears, touch the desired network. Note: You will need to know your network name (SSID). If your network has a password, you will also need to know the password.

   An information box will ask if you want to connect to the wireless network. Touch the Connect button to connect to the network or touch the Cancel button to return to the list of networks. If the network has a password, touch the password entry box. A keyboard will appear on the screen. To view the password as you type it, touch the Show Password checkbox.

   To use the keyboard, see HOW TO USE THE TOUCH SCREEN on page 18.

   When the console is connected to your wireless network, the WiFi menu option at the top of the screen will display the word CONNECTED. Then, touch the back button on the screen to return to the wireless network mode.

   To disconnect from a wireless network, select the wireless network and then touch the Forget button.

HOW TO ADJUST THE CUSHIONING SYSTEM

The treadmill features a cushioning system that reduces the impact as you walk or run on the treadmill.

Remove the key from the console and unplug the power cord. In order to adjust the cushions, you may need to place the treadmill in the storage position (see HOW TO FOLD THE TREADMILL on page 32).

For a more firm walking platform, turn a cushion to the position shown in drawing 1; for a less firm walking platform, turn the cushion to the position shown in drawing 2. Adjust the other cushions in the same way. **Note: Make sure that the cushions on the left and right sides of the treadmill are set to the same firmness level. The faster you run on the treadmill, or the more you weigh, the firmer the walking platform should be.**

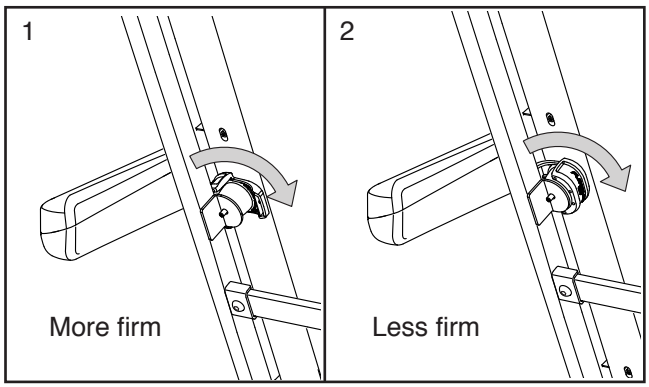

HOW TO USE THE TABLET HOLDER

IMPORTANT: The tablet holder is designed for use with most full-size tablets. Do not place any other electronic device or object in the tablet holder.

To insert a tablet into the tablet holder, set the bottom edge of the tablet in the tray. Then, pull the clip over the top edge of the tablet. **Make sure that the tablet is firmly secured in the tablet holder.** Reverse these actions to remove the tablet from the tablet holder.

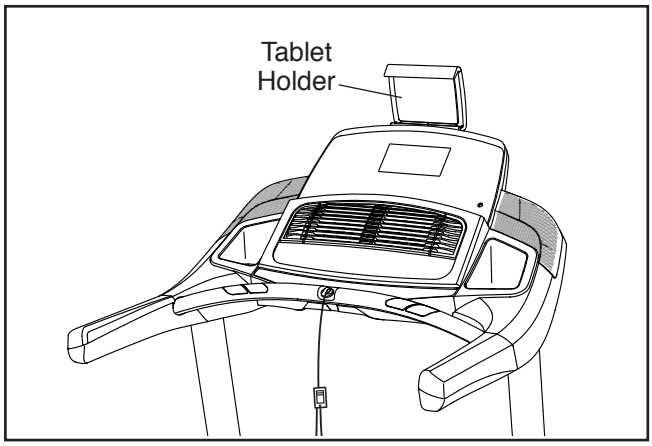

HOW TO FOLD AND MOVE THE TREADMILL

HOW TO FOLD THE TREADMILL

To avoid damaging the treadmill, adjust the incline to zero before you fold the treadmill. Then, remove the key and unplug the power cord. CAUTION: You must be able to safely lift 45 lbs. (20 kg) to raise, lower, or move the treadmill.

1. Hold the metal frame firmly in the location shown by the arrow below. **CAUTION: Do not hold the frame by the plastic foot rails. Bend your legs and keep your back straight.**

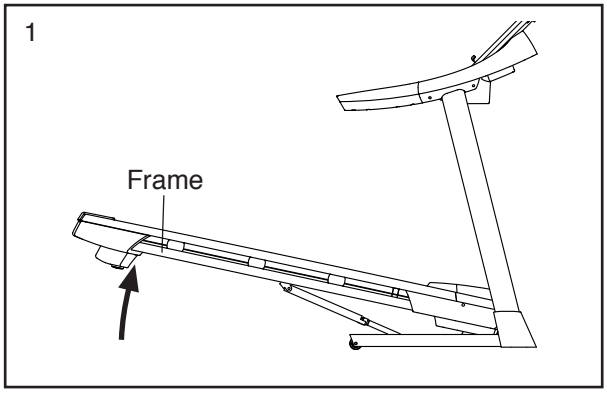

2. Raise the frame until the storage latch locks in the storage position. **CAUTION: Make sure that the storage latch locks.**

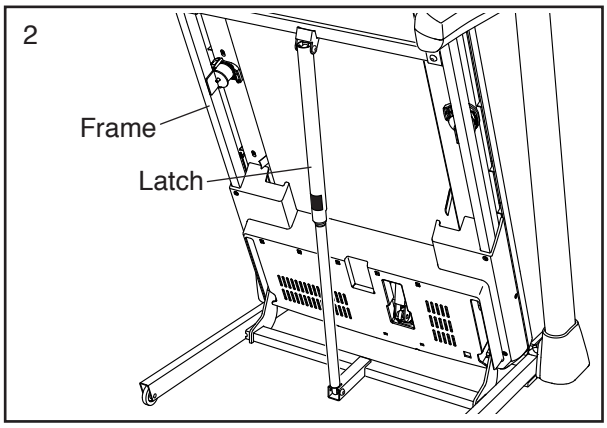

To protect the floor or carpet, place a mat under the treadmill. Keep the treadmill out of direct sunlight. Do not leave the treadmill in the storage position in temperatures above 85°F (30°C).

HOW TO MOVE THE TREADMILL

Before moving the treadmill, fold it as described at the left. **CAUTION: Make sure that the storage latch is locked in the storage position. Moving the treadmill may require two people.**

Hold the frame with both hands and carefully push or pull the treadmill to the desired location. **CAUTION: Do not move the treadmill over an uneven surface.**

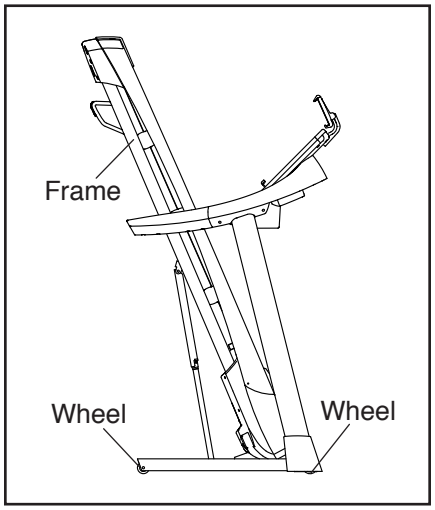

HOW TO LOWER THE TREADMILL FOR USE

1. Push the upper end of the frame forward, and gently press the upper part of the storage latch with your foot at the same time.

2. While pressing the storage latch with your foot, pull the upper end of the frame toward yourself.

3. Step back and let the frame lower to the floor.

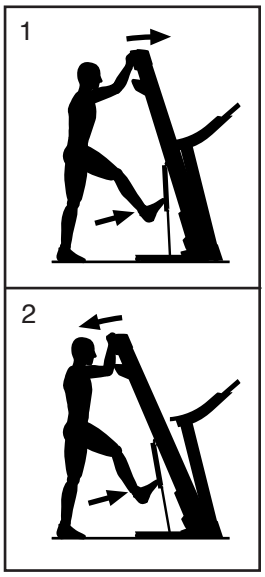

MAINTENANCE AND TROUBLESHOOTING

MAINTENANCE

Regular maintenance is important for optimal performance and to reduce wear. Inspect and properly tighten all parts each time the treadmill is used. Replace any worn parts immediately.

Regularly clean the treadmill and keep the walking belt clean and dry. First, **press the power switch into the off position and unplug the power cord.** Wipe exterior parts of the treadmill with a damp cloth and a small amount of mild soap. **IMPORTANT: Do not spray liquids directly onto the treadmill. To avoid damage to the console, keep liquids away from the console.** Then, thoroughly dry the treadmill with a soft towel.

TROUBLESHOOTING

Most treadmill problems can be solved by following the simple steps below. Find the symptom that applies, and follow the steps listed. If further assistance is needed, see the front cover of this manual.

SYMPTOM: The power does not turn on

a. Make sure that the power cord is plugged into a properly earthed outlet (see page 16). If an extension cord is needed, use only a 3-conductor, 14-gauge (1 mm^2) cord that is no longer than 5 ft. (1.5 m).

b. After the power cord has been plugged in, make sure that the key is inserted into the console.

c. Check the power switch located on the treadmill frame near the power cord. If the switch protrudes as shown, the switch has tripped. To reset the power switch, wait for five minutes and then press the switch back in.

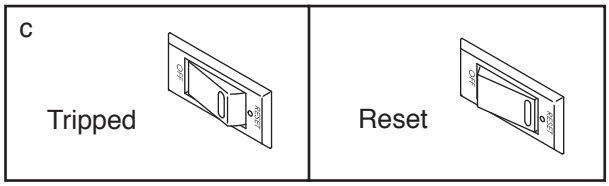

SYMPTOM: The power turns off during use

a. Check the power switch (see the drawing above). If the switch has tripped, wait for five minutes and then press the switch back in.

b. Make sure that the power cord is plugged in. If the power cord is plugged in, unplug it, wait for five minutes, and then plug it back in.

c. Remove the key from the console, and then reinsert it.

d. If the treadmill still will not run, please see the front cover of this manual.

SYMPTOM: The displays of the console do not function properly

a. Remove the key from the console and **UNPLUG THE POWER CORD.** Next, remove the five #8 x 3/4" Screws (2), and carefully pivot off the Motor Hood (65).

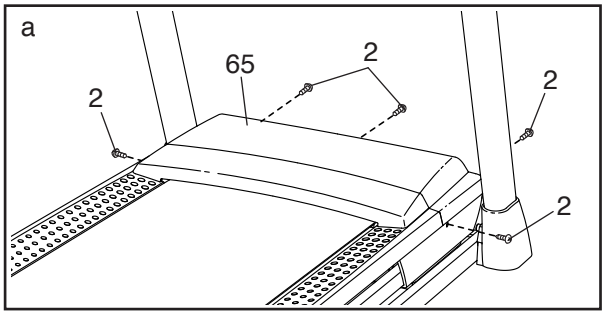

Next, locate the Reed Switch (104) and the Magnet (102) on the left side of the Pulley (49). Turn the Pulley until the Magnet is aligned with the Reed Switch. **Make sure that the gap between the Magnet and the Reed Switch is about 1/8 in. (3 mm).** If necessary, loosen the #8 x 3/4" Truss Head Screw (14), move the Reed Switch slightly, and then retighten the Truss Head Screw. Reattach the Motor Hood (see above), and run the treadmill for a few minutes to check for a correct speed reading.

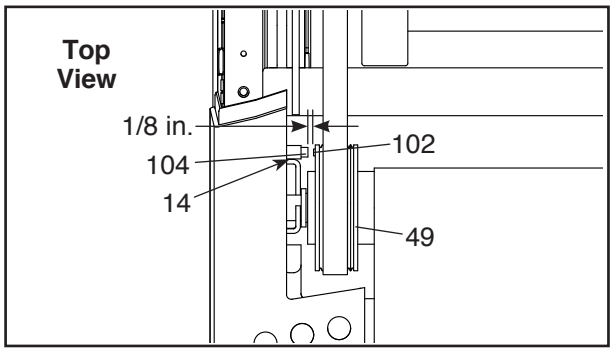

SYMPTOM: The walking belt slows when walked on

a. If an extension cord is needed, use only a 3-conductor, 14-gauge (1 mm^2) cord that is no longer than 5 ft. (1.5 m).

b. If the walking belt is overtightened, treadmill performance may decrease and the walking belt may become damaged. Remove the key and **UNPLUG THE POWER CORD.** Using the hex key, turn both idler roller screws counterclockwise, 1/4 of a turn. When the walking belt is properly tightened, you should be able to lift each edge of the walking belt 2 to 3 in. (5 to 7 cm) off the walking platform. Be careful to keep the walking belt centered. Then, plug in the power cord, insert the key, and walk on the treadmill for a few minutes. Repeat until the walking belt is properly tightened.

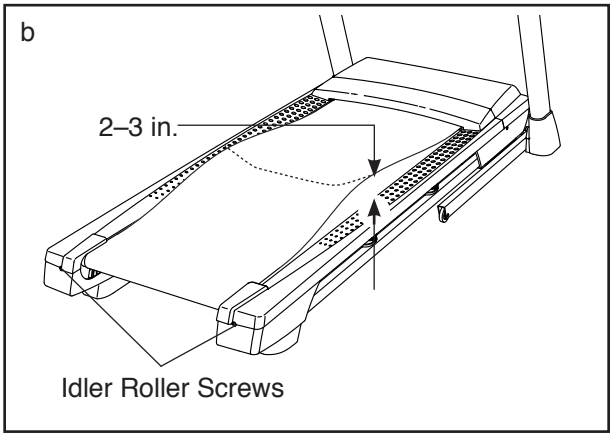

c. Your treadmill features a walking belt coated with high-performance lubricant. **IMPORTANT: Never apply silicone spray or other substances to the walking belt or the walking platform unless instructed to do so by an authorized service representative. Such substances may deteriorate the walking belt and cause excessive wear.** If you suspect that the walking belt needs more lubricant, see the front cover of this manual.

d. If the walking belt still slows when walked on, see the front cover of this manual.

SYMPTOM: The walking belt is not centered between the foot rails

a. **IMPORTANT: If the walking belt rubs against the foot rails, the walking belt may become damaged.** First, remove the key and **UNPLUG THE POWER CORD. If the walking belt has shifted to the left,** use the hex key to turn the left idler roller screw clockwise 1/2 of a turn; **if the walking belt has shifted to the right,** turn the left idler roller screw counterclockwise 1/2 of a turn. Be careful not to overtighten the walking belt. Then, plug in the power cord, insert the key, and walk on the treadmill for a few minutes. Repeat until the walking belt is centered.

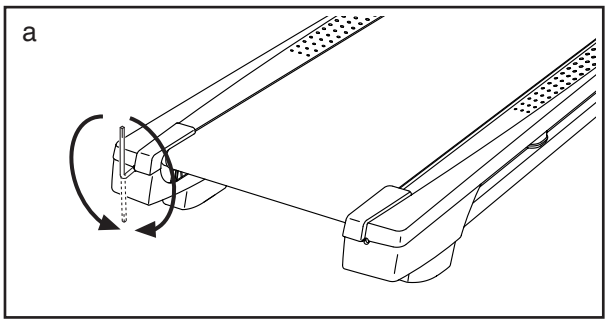

SYMPTOM: The walking belt slips when walked on

a. First, remove the key and **UNPLUG THE POWER CORD.** Using the hex key, turn both idler roller screws clockwise, 1/4 of a turn. When the walking belt is correctly tightened, you should be able to lift each edge of the walking belt 2 to 3 in. (5 to 7 cm) off the walking platform. Be careful to keep the walking belt centered. Then, plug in the power cord, insert the key, and walk on the treadmill for a few minutes. Repeat until the walking belt is properly tightened.

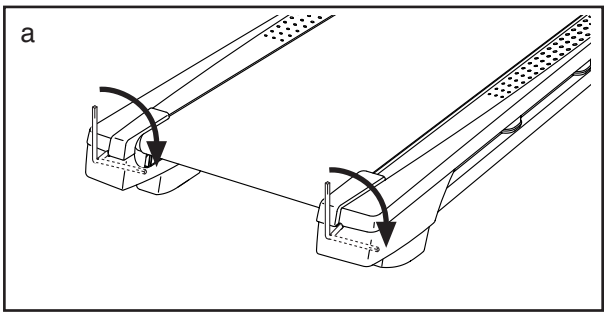

SYMPTOM: The tablet holder does not stay in place

a. Rotate the tablet holder backwards. Then, tighten the indicated screw slightly until the tablet holder stays in place when it is rotated to the desired position.

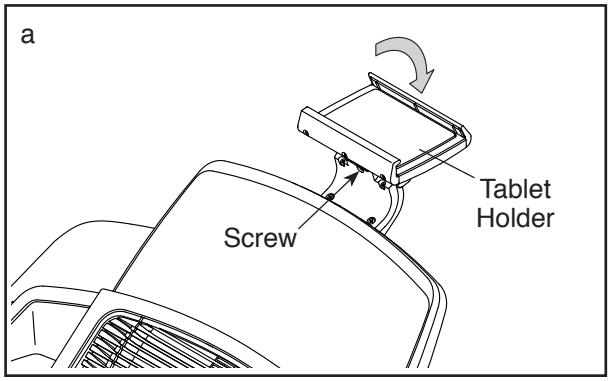

EXERCISE GUIDELINES

⚠ WARNING: Before beginning this or any exercise program, consult your physician. This is especially important for persons over age 35 or persons with pre-existing health problems.

The heart rate monitor is not a medical device. Various factors may affect the accuracy of heart rate readings. The heart rate monitor is intended only as an exercise aid in determining heart rate trends in general.

These guidelines will help you to plan your exercise program. For detailed exercise information, obtain a reputable book or consult your physician. Remember, proper nutrition and adequate rest are essential for successful results.

EXERCISE INTENSITY

Whether your goal is to burn fat or to strengthen your cardiovascular system, exercising at the proper intensity is the key to achieving results. You can use your heart rate as a guide to find the proper intensity level. The chart below shows recommended heart rates for fat burning and aerobic exercise.

165	*155*	*145*	*140*	*130*	*125*	*115*	♥
145	*138*	*130*	*125*	*118*	*110*	*103*	♥
125	*120*	*115*	*110*	*105*	*95*	*90*	♥
20	*30*	*40*	*50*	*60*	*70*	*80*	

To find the proper intensity level, find your age at the bottom of the chart (ages are rounded off to the nearest ten years). The three numbers listed above your age define your "training zone." The lowest number is the heart rate for fat burning, the middle number is the heart rate for maximum fat burning, and the highest number is the heart rate for aerobic exercise.

Burning Fat—To burn fat effectively, you must exercise at a low intensity level for a sustained period of time. During the first few minutes of exercise, your body uses carbohydrate calories for energy. Only after the first few minutes of exercise does your body begin to use stored fat calories for energy. If your goal is to burn fat, adjust the intensity of your exercise until your heart rate is near the lowest number in your training zone. For maximum fat burning, exercise with your heart rate near the middle number in your training zone.

Aerobic Exercise—If your goal is to strengthen your cardiovascular system, you must perform aerobic exercise, which is activity that requires large amounts of oxygen for prolonged periods of time. For aerobic exercise, adjust the intensity of your exercise until your heart rate is near the highest number in your training zone.

WORKOUT GUIDELINES

Warming Up—Start with 5 to 10 minutes of stretching and light exercise. A warm-up increases your body temperature, heart rate, and circulation in preparation for exercise.

Training Zone Exercise—Exercise for 20 to 30 minutes with your heart rate in your training zone. (During the first few weeks of your exercise program, do not keep your heart rate in your training zone for longer than 20 minutes.) Breathe regularly and deeply as you exercise; never hold your breath.

Cooling Down—Finish with 5 to 10 minutes of stretching. Stretching increases the flexibility of your muscles and helps to prevent post-exercise problems.

EXERCISE FREQUENCY

To maintain or improve your condition, complete three workouts each week, with at least one day of rest between workouts. After a few months of regular exercise, you may complete up to five workouts each week, if desired. Remember, the key to success is to make exercise a regular and enjoyable part of your everyday life.

SUGGESTED STRETCHES

The correct form for several basic stretches is shown at the right. Move slowly as you stretch—never bounce.

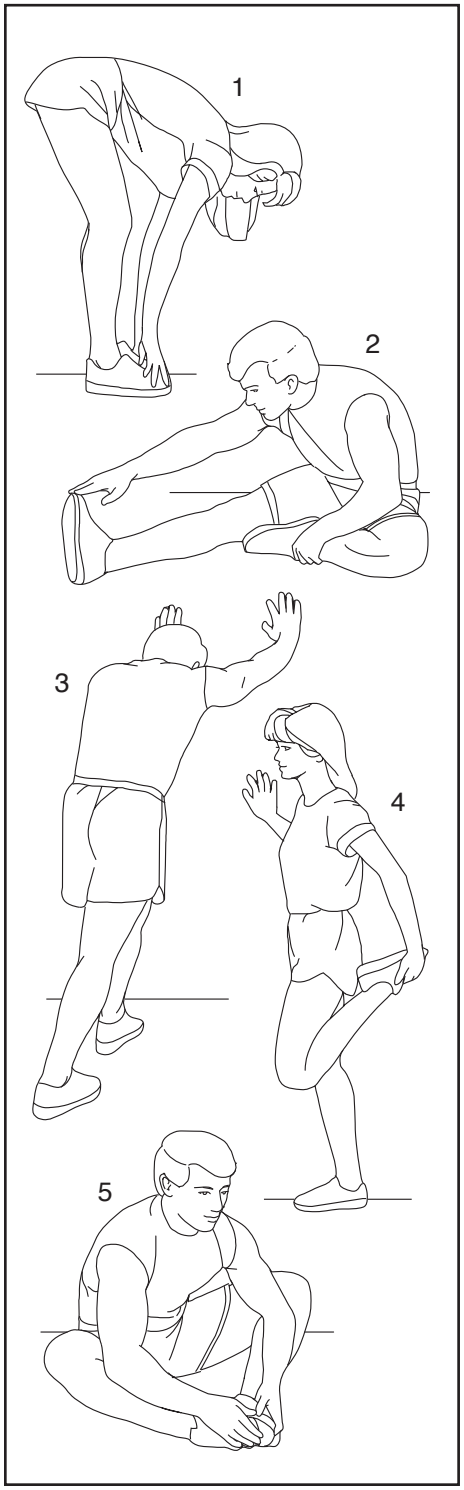

1. Toe Touch Stretch

Stand with your knees bent slightly and slowly bend forward from your hips. Allow your back and shoulders to relax as you reach down toward your toes as far as possible. Hold for 15 counts, then relax. Repeat 3 times. Stretches: Hamstrings, back of knees and back.

2. Hamstring Stretch

Sit with one leg extended. Bring the sole of the opposite foot toward you and rest it against the inner thigh of your extended leg. Reach toward your toes as far as possible. Hold for 15 counts, then relax. Repeat 3 times for each leg. Stretches: Hamstrings, lower back and groin.

3. Calf/Achilles Stretch

With one leg in front of the other, reach forward and place your hands against a wall. Keep your back leg straight and your back foot flat on the floor. Bend your front leg, lean forward and move your hips toward the wall. Hold for 15 counts, then relax. Repeat 3 times for each leg. To cause further stretching of the achilles tendons, bend your back leg as well. Stretches: Calves, achilles tendons and ankles.

4. Quadriceps Stretch

With one hand against a wall for balance, reach back and grasp one foot with your other hand. Bring your heel as close to your buttocks as possible. Hold for 15 counts, then relax. Repeat 3 times for each leg. Stretches: Quadriceps and hip muscles.

5. Inner Thigh Stretch

Sit with the soles of your feet together and your knees outward. Pull your feet toward your groin area as far as possible. Hold for 15 counts, then relax. Repeat 3 times. Stretches: Quadriceps and hip muscles.

PART LIST

Model No. NETL14917.0 R0517A

Key No.	Qty.	Description
1	23	#8 x 1/2" Screw
2	32	#8 x 3/4" Screw
3	1	5/16" x 2 1/4" Bolt
4	2	5/16" x 3/4" Screw
5	4	#10 Star Washer
6	5	5/16" x 1 3/4" Bolt
7	4	3/8" x 2 3/8" Screw
8	1	#8 x 1/2" Silver Screw
9	4	#10 x 3/4" Screw
10	6	#8 x 1/2" Washer Head Screw
11	6	5/16" Star Washer
12	4	1/4" x 1/2" Screw
13	8	3/8" Star Washer
14	9	#8 x 3/4" Truss Head Screw
15	3	1/4" x 2 1/2" Screw
16	1	3/8" x 1 1/2" Bolt
17	2	3/8" x 1 1/2" Wheel Bolt
18	4	1/4" Star Washer
19	4	#8 x 7/16" Screw
20	2	5/16" Motor Screw
21	2	3/8" Pin
22	2	3/8" x 1 1/8" Bolt
23	1	#8 x 1/2" Pan Head Screw
24	4	#8 Star Washer
25	4	Wheel
26	1	Cable Tie
27	1	Right Tray
28	4	5/16" x 2 1/2" Screw
29	1	3/8" x 1 3/4" Hex Head Bolt
30	4	5/16" Flat Washer
31	2	#8 x 1" Screw
32	2	Incline Motor Spacer
33	6	3/8" Jam Nut
34	6	5/16" Nut
35	13	1/4" Nut
36	1	Left Tray
37	8	#8 x 5/8" Screw
38	4	#8 x 5/8" Machine Screw
39	6	Isolator
40	2	Rear Foot
41	1	Latch Crossbar
42	1	Left Foot Rail
43	1	Caution Decal
44	1	Walking Platform
45	1	Walking Belt
46	2	Belt Guide
47	1	Right Rear Foot
48	4	Wire Tie
49	1	Drive Roller/Pulley
50	2	1/4" x 1 1/4" Screw
51	2	9/32" Plastic Bushing
52	4	3/8" Plastic Bushing
53	1	Storage Latch
54	1	Drive Motor
55	1	Motor Belt
56	1	Frame
57	1	Left Rear Foot
58	8	#3 x 1/4" Screw
59	4	Rubber Cushion
60	1	Right Foot Rail
61	1	Idler Roller
62	2	3/8" x 1 3/4" Screw
63	2	3/8" x 1 1/4" Screw
64	1	Console Base
65	1	Motor Hood
66	1	Hood Accent
67	2	Incline Frame Spacer
68	5	Clip
69	1	Incline Motor
70	1	Incline Frame
71	2	Frame Spacer
72	1	Controller
73	1	Controller Plate
74	1	Receptacle
75	1	Power Switch
76	1	Power Cord
77	2	Grommet
78	1	Belly Pan
79	1	Left Handrail Cover
80	1	Console
81	1	Upright Wire
82	1	Left Base Cover
83	1	Right Base Cover
84	1	Controller Clamp
85	1	Right Handrail Cover
86	2	Handrail
87	1	Left Bottom Handrail Cover
88	1	Right Bottom Handrail Cover
89	1	Left Upright
90	1	Right Upright
91	2	Warning Decal
92	2	Console Clamp
93	1	Pulse Crossbar
94	1	Base
95	12	#6 x 1/2" Screw
96	2	3/8" Motor Washer
97	2	Base Pad
98	1	Tablet Holder
99	1	Left Inner Base Cover
100	1	Right Inner Base Cover

Key No.	Qty.	Description
101	2	3/8" Washer
102	1	Magnet
103	1	Reed Switch Clip
104	1	Reed Switch
105	3	#8 Nut
106	3	#8 x 1/2" Machine Screw
107	1	Filter
108	2	Motor Bushing
109	1	Key/Clip
110	1	Pulse Crossbar Top
111	1	Console Frame
112	1	Motor Isolator
113	1	Left Speaker Grill
114	1	Right Speaker Grill
115	2	Speaker
116	1	Left Speaker Cover
117	1	Right Speaker Cover
118	2	Fan
119	8	3/16" Washer
120	6	#8 x 1" Truss Head Screw
121	1	Console Ground Wire
*	–	User's Manual

Note: Specifications are subject to change without notice. For information about ordering replacement parts, see the back cover of this manual. *These parts are not illustrated.

EXPLODED DRAWING A

Model No. NETL14917.0 R0517A

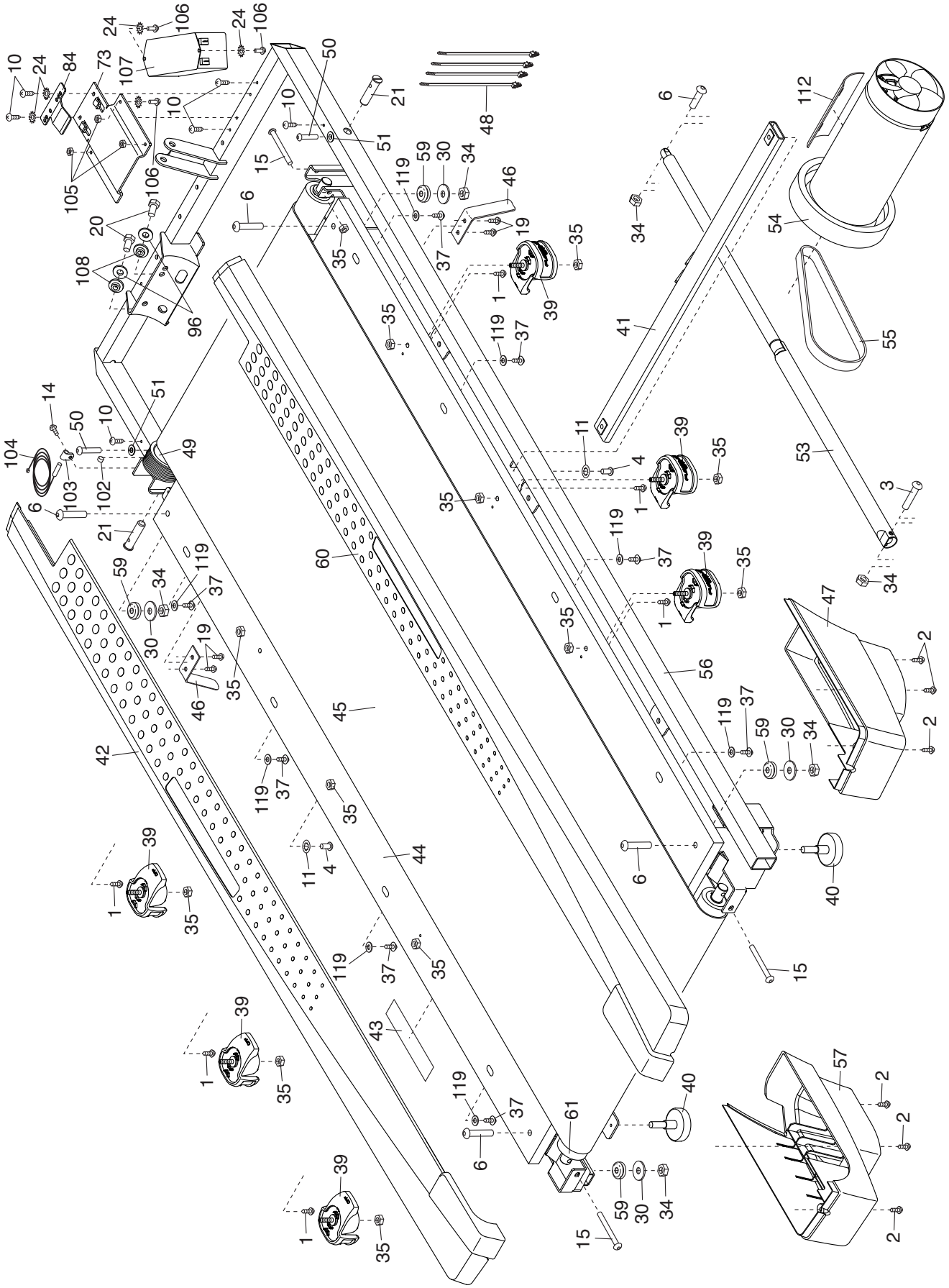

EXPLODED DRAWING B

Model No. NETL14917.0 R0517A

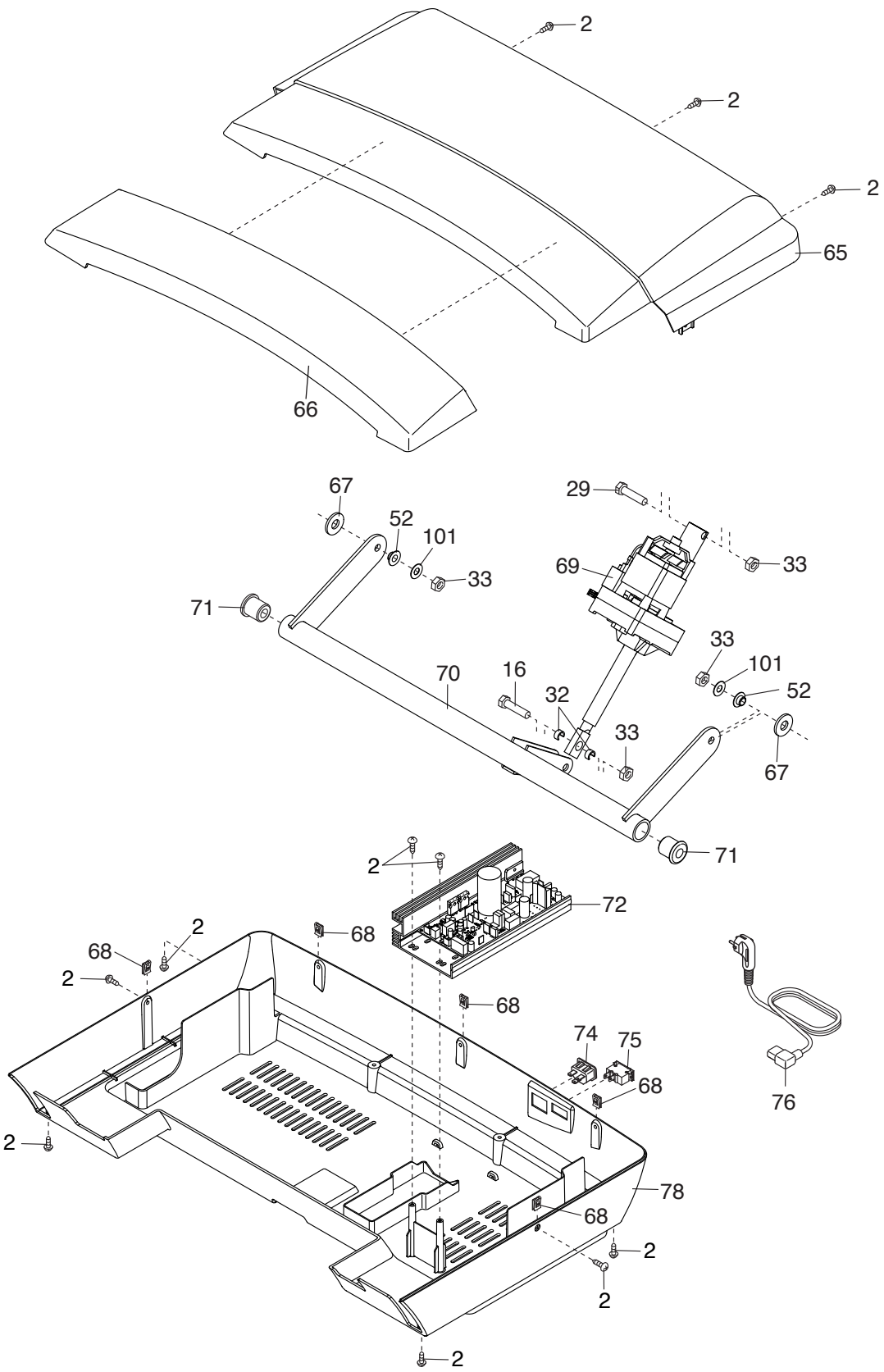

EXPLODED DRAWING C

Model No. NETL14917.0 R0517A

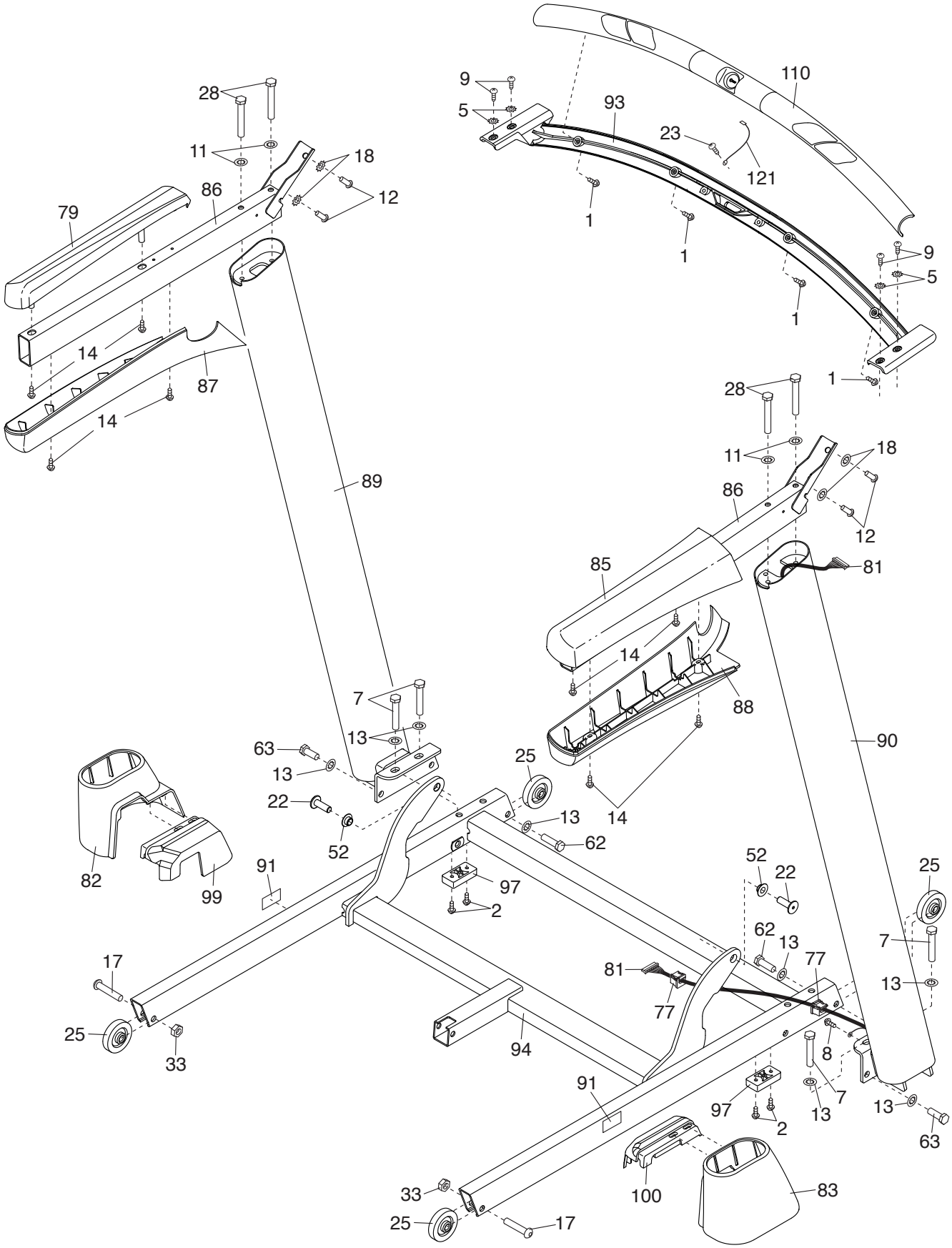

EXPLODED DRAWING D

Model No. NETL14917.0 R0517A

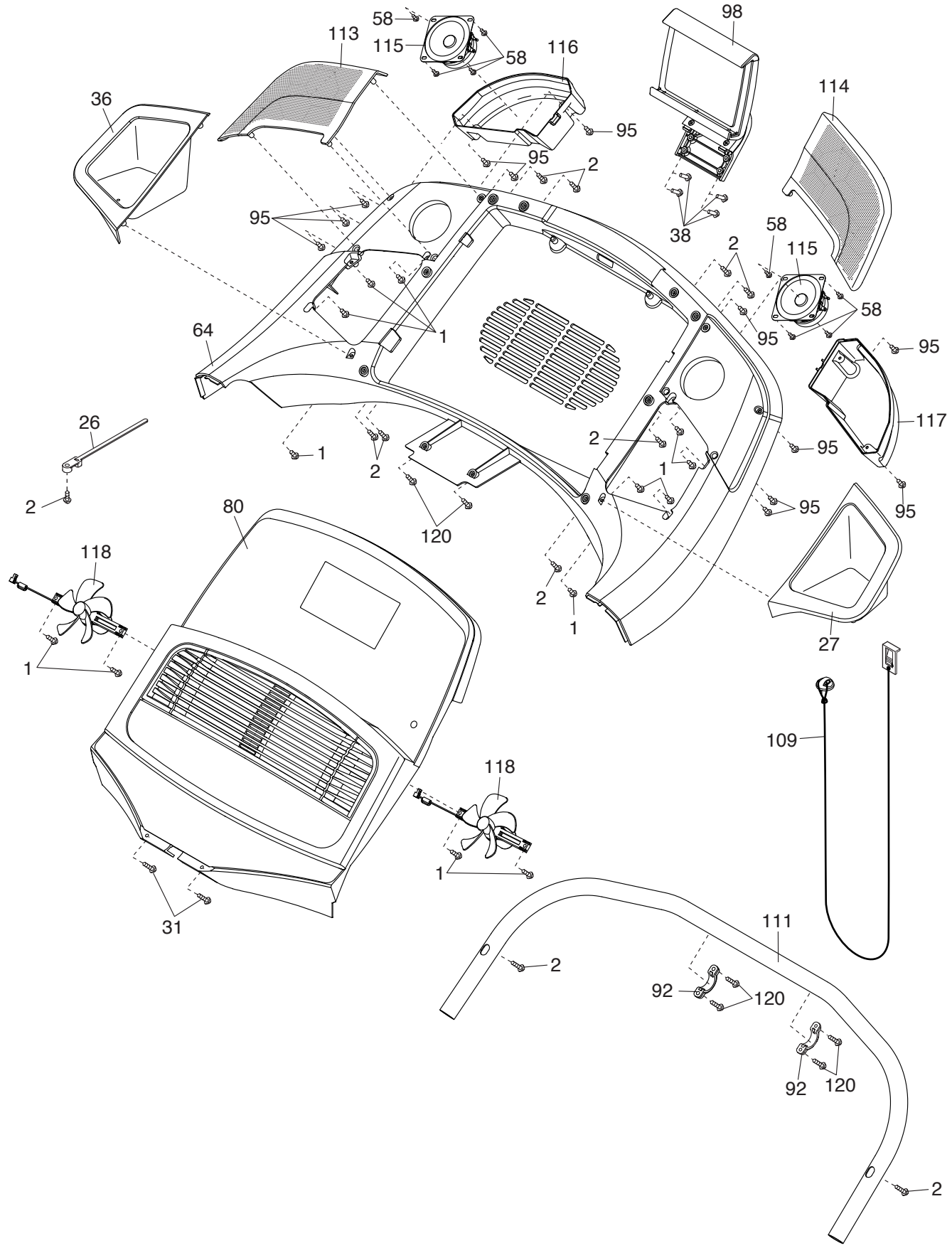

ORDERING REPLACEMENT PARTS

To order replacement parts, please see the front cover of this manual. To help us assist you, be prepared to provide the following information when contacting us:

- the model number and serial number of the product (see the front cover of this manual)
- the name of the product (see the front cover of this manual)
- the key number and description of the replacement part(s) (see the PART LIST and the EXPLODED DRAWING near the end of this manual)

RECYCLING INFORMATION

This electronic product must not be disposed of in municipal waste. To preserve the environment, this product must be recycled after its useful life as required by law.

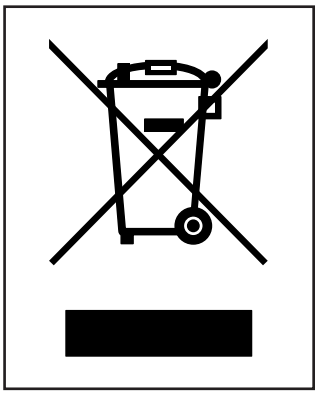

Please use recycling facilities that are authorized to collect this type of waste in your area. In doing so, you will help to conserve natural resources and improve European standards of environmental protection. If you require more information about safe and correct disposal methods, please contact your local city office or the establishment where you purchased this product.

Part No. 390278 R0517A
Printed in China © 2017 ICON Health & Fitness, Inc.